1. ALL RESISTANCE VALUES ARE IN OHMS, 0.1 WATT +/- 5%.
2. ALL CAPACITANCE VALUES ARE IN MICROFARADS.
3. ALL CRYSTALS & OSCILLATOR VALUES ARE IN HERTZ.

X1032 MLB BTTF

REV	ECN	DESCRIPTION OF REVISION	CK APPD / DATE
2	0013473349	ENGINEERING RELEASED	2018-08-09

LAST_MODIFICATION=Thu Aug 9 14:09:34 2018

PAGE	CSA	CONTENTS	SYNC	DATE
1	1	Table of Contents		
2	2	BOM Configuration		
3	3	BOM Configuration		
4	4	PD Parts		
5	5	CPU GFX	J122_MLB	03/30/2018
6	6	CPU Misc/JTAG/CFG/RSVD	J122_MLB	03/30/2018
7	7	CPU LPDDR3 Interface	J122_MLB	03/30/2018
8	8	CPU Power	J122_MLB	03/30/2018
9	9	PCH Power	J122_MLB	03/30/2018
10	10	CPU & PCH Grounds	J122_MLB	03/30/2018
11	11	CPU Decoupling 1	J122_MLB	03/30/2018
12	12	CPU Decoupling 2	J122_MLB	03/30/2018
13	13	PCH Decoupling	J122_MLB	03/30/2018
14	14	PCH Audio/LPC/SPI/SMBus	J122_MLB	03/30/2018
15	15	PCH Power Management	J122_MLB	03/30/2018
16	16	PCH PCIe/USB/CLK	J122_MLB	03/30/2018
17	17	PCH GPIO/LPSS	J122_MLB	03/30/2018
18	18	CPU/PCH Merged XDP	X589_CPU_CNL_Y	03/13/2017
19	19	Chipset Shared Support	X589_CPU_CNL_Y	03/27/2017
20	20	Chipset Project Support	X589_CPU_CNL_Y	03/07/2017
21	22	LPDDR3 VREF MARGINING	J122_MLB	03/30/2018
22	23	LPDDR3 DRAM Channel A (0-63)	J122_MLB	03/30/2018
23	25	LPDDR3 DRAM Channel B (0-63)	J122_MLB	03/30/2018
24	27	LPDDR3 DRAM Termination	T290_CARD_CPU_U	04/06/2018
25	28	USB-C HIGH SPEED 1	X1032_MLB_P4BP	02/13/2017
26	29	USB-C HIGH SPEED 2	X1032_MLB_P4BP	02/13/2017
27	30	USB-C SUPPORT	X1032_MLB_P4BP	02/13/2017
28	31	USB-C PORT CONTROLLER A	X1032_MLB_P4BP	02/13/2017
29	32	USB-C PORT CONTROLLER B		
30	33	USB-C CONNECTOR	X1032_MLB_P4BP	02/13/2017
31	34	USB-C SUPPORT 2	X1032_MLB_P4BP	02/13/2017
32	37	WIFI/BT MODULE	MKARAKUCUK	03/22/2017
33	38	WIFI/BT Module Support	X1032_MLB_P4BP	03/03/2017
34	39	SoC GPIO/SEP/USB/DDR/Test	X589_BIGSUR	03/15/2017
35	40	SoC AOP/AON/SMC	X589_BIGSUR	03/16/2017
36	41	SoC ISP/I2C/UART/SPI/I2S	X589_BIGSUR	03/15/2017
37	42	SoC PCIe	X589_BIGSUR	03/15/2017
38	43	SoC Power 1	X589_BIGSUR	02/13/2017
39	44	SoC Power 2	X589_BIGSUR	02/13/2017
40	45	SoC Power 3	X589_BIGSUR	02/13/2017
41	46	SoC Ground	X589_BIGSUR	02/13/2017
42	47	SoC Shared Support	X589_BIGSUR	03/16/2017
43	48	SoC Project Support	X589_BIGSUR	02/13/2017
44	50	Secure Element	X941_MLB	03/10/2017
45	52	I2C Connections 1	X589_BIGSUR	02/13/2017
46	53	I2C Connections 2	X589_BIGSUR	02/13/2017
47	54	Power Sensors High Side	X1032_MLB_P4BP	02/14/2017
48	55	Power Sensors Load Side	X1032_MLB_P4BP	02/14/2017
49	56	Power Sensors Extended		
50	58	Thermal Sensors	X1032_MLB_P4BP	02/14/2017
51	60	Fans	X1032_MLB_P4BP	02/13/2017
52	61	RIO Connector		
53	64	Audio Speaker Amplifiers	AHAAGE_AUD	05/23/2017
54	66	Audio Connectors	AHAAGE_AUD	04/19/2017
55	67	Keyboard & Trackpad 1	X260_MLB	02/16/2017
56	68	Keyboard & Trackpad 2	X589_CARD_IPD	02/16/2017
57	69	DC-In & Battery Connectors	X589_BIGSUR	02/15/2017
58	70	PBUS Supply & Battery Charger	X1032_MLB_P4BP	02/13/2017
59	71	CPU IMVP8 Regulator IC	J122_MLB	03/30/2018
60	72	CPU VCore/VccSA Power Stage	J122_MLB	03/30/2018
61	74	CPU VccGT Power Stage	J122_MLB	03/30/2018
62	76	VR - 5V, 3V3	X589_BIGSUR	03/01/2017
63	78	PMIC BUCKS AND SWs	X589_BIGSUR	03/16/2017
64	79	PMIC LDOs	X589_BIGSUR	03/16/2017
65	80	PMIC GPIOs & Control	X589_BIGSUR	03/16/2017
66	81	POWER - VDDQ, VCCIO	X589_CPU_CNL_Y	03/08/2017
67	82	Power FETs	X589_CPU_CNL_Y	02/22/2017
68	84	LCD Backlight Driver	X1032_MLB_P4BP	02/13/2017
69	85	eDP Display Connector	X1032_MLB_P4BP	02/13/2017
70	86	S4E<0>	X1032_MLB_P4BP	02/13/2017
71	87	S4E<1>	X1032_MLB_P4BP	02/13/2017
72	88	S4E<2>	X1032_MLB_P4BP	02/14/2017
73	90	NAND VCC VR	X1032	02/13/2017
74	91	SSD Support		
75	120	Power Aliases - 1	X589_CPU_CNL_Y	02/21/2017
76	121	Power Aliases - 2	X589_CPU_CNL_Y	02/21/2017
77	122	Signal Aliases		
78	123	Memory Signal Swaps	J122_MLB	04/13/2018
79	124	ICT FCT		
80	127	Desense Caps 1		
81	128	Desense Caps 2		
82	140	Dev Support	X589_BIGSUR	04/12/2017
83	141	BOM Variants 1		
84	142	BOM Variants 2		
85	145	BOM Alternates		

PART#	QTY	DESCRIPTION	REFERENCE DESIGNATOR(S)	CRITICAL	BOM OPTION
051-04039	1	SCH,MLB_BTTF,X1032	SCH	CRITICAL	SCHEM
820-01521	1	PCBF,MLB_BTTF,X1032	MLB	CRITICAL	PCBF

苹果最新图纸

DRAWING TITLE
SCHEM,MLB-BTTF,X1032

Apple Inc.

DRAWING NUMBER 051-04039 SIZE D
REVISION 2.0.0
BRANCH
PAGE 1 OF 145
SHEET 1 OF 85

NOTICE OF PROPRIETARY PROPERTY:
THE INFORMATION CONTAINED HEREIN IS THE PROPRIETARY PROPERTY OF APPLE INC.
THE POSESSOR AGREES TO THE FOLLOWING:
I TO MAINTAIN THIS DOCUMENT IN CONFIDENCE
II NOT TO REPRODUCE OR COPY IT
III NOT TO REVEAL OR PUBLISH IT IN WHOLE OR PART
IV ALL RIGHTS RESERVED

Module Parts

CPU

PART#	QTY	DESCRIPTION	REFERENCE DESIGNATOR(S)	CRITICAL	BOM OPTION
337S00592	1	CPU,AML-Y,QQQE,PQS,1.8,1.15,BGA1515	U0500	CRITICAL	CPU_AMLY:QQQE
337S00593	1	CPU,AML-Y,QQQF,PQS,1.6,1.05,BGA1515	U0500	CRITICAL	CPU_AMLY:QQQF
337S00594	1	CPU,AML-Y,QQQG,PQS,1.6,1.05,BGA1515	U0500	CRITICAL	CPU_AMLY:QQQG
337S00613	1	CPU,AML-Y,QQQM,PQS,H0,1.8,7W,1.15,B1515	U0500	CRITICAL	CPU_AMLY:QQQM
337S00614	1	CPU,AML-Y,QQQN,PQS,H0,1.6,7W,1.1,B1515	U0500	CRITICAL	CPU_AMLY:QQQN
337S00615	1	CPU,AML-Y,QQQP,PQS,H0,1.6,7W,1.05,B1515	U0500	CRITICAL	CPU_AMLY:QQQP
337S00621	1	CPU,AML-Y,QQQQ,PQS,H0,1.8,7W,1.15,B1515	U0500	CRITICAL	CPU_AMLY:QQQQ
337S00622	1	CPU,AML-Y,QQQR,PQS,H0,1.6,7W,1.1,B1515	U0500	CRITICAL	CPU_AMLY:QQQR
337S00623	1	CPU,AML-Y,QQQS,PQS,H0,1.6,7W,1.05,B1515	U0500	CRITICAL	CPU_AMLY:QQQS
337S00624	1	CPU,AML-Y,SREKN,PRQ,1.8,7W,1.15,BGA1515	U0500	CRITICAL	CPU_AMLY:SREKN
337S00625	1	CPU,AML-Y,SREKP,PRQ,1.6,7W,1.1,BGA1515	U0500	CRITICAL	CPU_AMLY:SREKP
337S00626	1	CPU,AML-Y,SREKQ,PRQ,1.6,7W,1.05,BGA1515	U0500	CRITICAL	CPU_AMLY:SREKQ
998-15364	1	INTERPOSER,VRTT ADAPTER,KBL-Y,BGA1515	U0500	CRITICAL	CPU_AMLY:INTERPOSER

TBT Titan Ridge

PART#	QTY	DESCRIPTION	REFERENCE DESIGNATOR(S)	CRITICAL	BOM OPTION
338S00305	1	IC,TBT,TITAN RIDGE,QTJE,P-ES,A0,CSP337	U2800	CRITICAL	TBT_TR:A0
338S00356	1	IC,TBT,TITAN RIDGE DP,QTZZ,ES2,B0,CSP337	U2800	CRITICAL	TBT_TR:B0
338S00399	1	IC,TBT,TITAN RIDGE DP,QTZZ,ES2,C0,CSP337	U2800	CRITICAL	TBT_TR:C0
338S00408	1	IC,TBT,TITAN RIDGE DP,QUJK,QS,C1,CSP337	U2800	CRITICAL	TBT_TR:C1
338S00441	1	IC,TBT,TITANRIDGE DP,SLMHS,PRQ,C1,CSP337	U2800	CRITICAL	TBT_TR:PRQ

Ace

PART#	QTY	DESCRIPTION	REFERENCE DESIGNATOR(S)	CRITICAL	BOM OPTION
353S00961	2	IC,CD3215,ACE,C00,USB PWR SW,BLNK,BGA96	U3100,U3200	CRITICAL	ACE:C0_BGA
353S01442	2	IC,CD3215,ACE,C00,USB PWRSW,BLNK,NFBGA96	U3100,U3200	CRITICAL	ACE:C0_NFBGA

Wireless

PART#	QTY	DESCRIPTION	REFERENCE DESIGNATOR(S)	CRITICAL	BOM OPTION
339S00448	1	MODULE,WIFI,YEBISU CIDRE,U,ES4.8,LGA160	U3700	CRITICAL	WIRELESS:USI

PART NUMBER	ALTERNATE FOR PART NUMBER	BOM OPTION	REF DES	COMMENTS:
339S00446	339S00448		ALL	Murata Module

SOC

PART#	QTY	DESCRIPTION	REFERENCE DESIGNATOR(S)	CRITICAL	BOM OPTION
339S00370	1	POP,GIBRALTAR+1GB 20NM,M,B0,SCK,CSP1406	U3900	CRITICAL	SOC:B0_1G

PART NUMBER	ALTERNATE FOR PART NUMBER	BOM OPTION	REF DES	COMMENTS:
339S00371	339S00370	SOC:B0_1G	ALL	Hynix 1GB SCK
339S00375	339S00370	SOC:B0_1G	ALL	Micron 1GB SCK
339S00376	339S00370	SOC:B0_1G	ALL	Hynix 1GB ATK

PART#	QTY	DESCRIPTION	REFERENCE DESIGNATOR(S)	CRITICAL	BOM OPTION
339S00372	1	POP,GIBRALTAR+2GB 20NM,M,B0,SCK,CSP1406	U3900	CRITICAL	SOC:B0_2G

PART NUMBER	ALTERNATE FOR PART NUMBER	BOM OPTION	REF DES	COMMENTS:
339S00373	339S00372	SOC:B0_2G	ALL	Hynix 2GB SCK
339S00377	339S00372	SOC:B0_2G	ALL	Micron 2GB ATK
339S00378	339S00372	SOC:B0_2G	ALL	Hynix 2GB ATK

PMU

PART#	QTY	DESCRIPTION	REFERENCE DESIGNATOR(S)	CRITICAL	BOM OPTION
338S00267	1	IC,PMU,CALPE,D2249A0,OTP-AI,CSP324,0.4P	U7800	CRITICAL	PMU:A0_A

DRAM

PART#	QTY	DESCRIPTION	REFERENCE DESIGNATOR(S)	CRITICAL	BOM OPTION
333S00052	2	IC,SDRAM,LPDDR3-1866,32GBIT,20NM,BGA253	U2300,U2500	CRITICAL	DRAM:SAMSUNG_8GB
333S00130	2	IC,LPDDR3-1866,64GBIT,18NM,S,BGA253	U2300,U2500	CRITICAL	DRAM:SAMSUNG_16GB
333S00110	2	IC,LPDDR3-1866,32GBIT,21NM,BGA253	U2300,U2500	CRITICAL	DRAM:HYNIX_8GB
333S00111	2	IC,LPDDR3-1866,64GBIT,21NM,BGA253	U2300,U2500	CRITICAL	DRAM:HYNIX_16GB
333S00082	2	IC,LPDDR3-1866,32GBIT,20NM,BGA253	U2300,U2500	CRITICAL	DRAM:MICRON_8GB_1866
333S00113	2	IC,LPDDR3-1866,64GBIT,20NM,M,BGA253	U2300,U2500	CRITICAL	DRAM:MICRON_16GB
333S00199	2	IC,LPDDR3-2133,32GBIT,20NM,BGA253	U2300,U2500	CRITICAL	DRAM:MICRON_8GB

NAND

PART#	QTY	DESCRIPTION	REFERENCE DESIGNATOR(S)	CRITICAL	BOM OPTION
335S00273	2	NAND,1Z,128GBM,S4E,128G,SD,HPN1,ULGA110	U8600,U8700	CRITICAL	NAND:HPN1_256G_2L
335S00289	3	NAND,3DV3,42GBP,XXX,S4E,170G,T,ULGA110	U8600,U8700,U8800	CRITICAL	NAND:PMLC_128G_TO
335S00301	3	NAND,3DV3,42GBP,XXX,S4E,170G,SD,ULGA110	U8600,U8700,U8800	CRITICAL	NAND:PMLC_128G_SD
335S00290	3	NAND,3DV3,85GBP,XXX,S4E,170G,T,ULGA110	U8600,U8700,U8800	CRITICAL	NAND:PMLC_256G_TO
335S00302	3	NAND,3DV3,85GBP,XXX,S4E,170G,SD,ULGA110	U8600,U8700,U8800	CRITICAL	NAND:PMLC_256G_SD
335S00292	3	NAND,3DV3,170GBP,XXX,S4E,170G,T,ULGA110	U8600,U8700,U8800	CRITICAL	NAND:PMLC_512G_TO
335S00304	3	NAND,3DV3,170GBP,XXX,S4E,170G,SD,ULGA110	U8600,U8700,U8800	CRITICAL	NAND:PMLC_512G_SD
998-12416	3	NAND,3DV3,42GBP,S4E,170G,T,SUB X,ULGA110	U8600,U8700,U8800	CRITICAL	NAND:PMLC_128G_TO_NM

PART NUMBER	ALTERNATE FOR PART NUMBER	BOM OPTION	REF DES	COMMENTS:
998-12417	998-12416	NAND:PMLC_128G_TO_NM	ALL	TO 128G Substrate 2

PART#	QTY	DESCRIPTION	REFERENCE DESIGNATOR(S)	CRITICAL	BOM OPTION
335S00323	3	NAND,3DV3,42GBP,XXX,S4E,170G,SD,ULGA110	U8600,U8700,U8800	CRITICAL	NAND:PMLC_128G_SD_NM
998-12418	3	NAND,3DV3,85GBP,S4E,170G,T,SUB X,ULGA110	U8600,U8700,U8800	CRITICAL	NAND:PMLC_256G_TO_NM

PART NUMBER	ALTERNATE FOR PART NUMBER	BOM OPTION	REF DES	COMMENTS:
998-12419	998-12418	NAND:PMLC_256G_TO_NM	ALL	TO 256G Substrate 2

PART#	QTY	DESCRIPTION	REFERENCE DESIGNATOR(S)	CRITICAL	BOM OPTION
335S00324	3	NAND,3DV3,85GBP,XXX,S4E,170G,SD,ULGA110	U8600,U8700,U8800	CRITICAL	NAND:PMLC_256G_SD_NM
998-12422	3	NAND,3DV3,170GBP,S4E,170G,T,SUBX,ULGA110	U8600,U8700,U8800	CRITICAL	NAND:PMLC_512G_TO_NM

PART NUMBER	ALTERNATE FOR PART NUMBER	BOM OPTION	REF DES	COMMENTS:
998-12423	998-12422	NAND:PMLC_512G_TO_NM	ALL	TO 512G Substrate 2

PART#	QTY	DESCRIPTION	REFERENCE DESIGNATOR(S)	CRITICAL	BOM OPTION
335S00326	3	NAND,3DV3,170GBP,XXX,S4E,170G,SD,ULGA110	U8600,U8700,U8800	CRITICAL	NAND:PMLC_512G_SD_NM
335S00322	3	NAND,3DV4,512GBM,S4E,256G,SS,ULGA110	U8600,U8700,U8800	CRITICAL	NAND:3DV4_1P5T_SS
335S00373	3	NAND,3DV4,512GBM,S4E,256G,MG3,SS,ULGA110	U8600,U8700,U8800	CRITICAL	NAND:3DV4_1P5T_SS_MG3

Programmables

TBT ROM

PART#	QTY	DESCRIPTION	REFERENCE DESIGNATOR(S)	CRITICAL	BOM OPTION
335S00133	1	IC,SPI SERIAL FLASH,8MBITS,3.0V,USON8	U2890	CRITICAL	TBT_ROM:BLANK
341S00905	1	IC,NVM (V5.7) PROTO-0,X1032	U2890	CRITICAL	TBT_ROM:P0
341S00922	1	IC,NVM (V1.1) NEW,PROTO-0,X1032	U2890	CRITICAL	TBT_ROM:P0_B0
341S00942	1	IC,NVM (V5.1) PROTO-1,X1032	U2890	CRITICAL	TBT_ROM:P1
341S00982	1	IC,NVM (VXXX) PROTO-2,X1032	U2890	CRITICAL	TBT_ROM:P2
341S01046	1	IC,NVM (VXXX) EVT,X1032	U2890	CRITICAL	TBT_ROM:EVT
341S01150	1	IC,NVM (VXXX) PROTO-3,X1032	U2890	CRITICAL	TBT_ROM:P3
341S01177	1	IC,NVM (VXXX) EVT-2,X1032	U2890	CRITICAL	TBT_ROM:EVT2

BT ROM

PART#	QTY	DESCRIPTION	REFERENCE DESIGNATOR(S)	CRITICAL	BOM OPTION
335S00256	1	IC,SPI SERIAL FLASH,2MBIT,1.8V,DFN8	U3770	CRITICAL	BT_ROM:BLANK
341S00745	1	IC,BT ROM (V4) PROTO-0,X1032	U3770	CRITICAL	BT_ROM:P0
341S00939	1	BT SFLASH ROM (V22.33.40) PROTO-1,X1032	U3770	CRITICAL	BT_ROM:P1
341S00983	1	BT SFLASH ROM (VXXX) PROTO-2,X1032	U3770	CRITICAL	BT_ROM:P2
341S01042	1	BT SFLASH ROM (VXXX) EVT,X1032	U3770	CRITICAL	BT_ROM:EVT
341S01176	1	BT SFLASH ROM (VXXX) EVT-2,X1032	U3770	CRITICAL	BT_ROM:EVT2

PART NUMBER	ALTERNATE FOR PART NUMBER	BOM OPTION	REF DES	COMMENTS:
335S00248	335S00256	BT_ROM:BLANK	ALL	Macronix
335S00255	335S00256	BT_ROM:BLANK	ALL	Adesto

Wifi ROM

PART#	QTY	DESCRIPTION	REFERENCE DESIGNATOR(S)	CRITICAL	BOM OPTION
335S00145	1	IC,EEPROM,4KBIT,1.8V,SELECT ORG,TDFN8	U3780	CRITICAL	WIFI_ROM:BLANK
341S00744	1	WIFI ROM (P101) PROTO-0,WW1,X1032	U3780	CRITICAL	WIFI_ROM:P0

PART NUMBER	ALTERNATE FOR PART NUMBER	BOM OPTION	REF DES	COMMENTS:
335S00236	335S00145	WIFI_ROM:BLANK	ALL	Rohm

SOC ROM

PART#	QTY	DESCRIPTION	REFERENCE DESIGNATOR(S)	CRITICAL	BOM OPTION
335S00203	1	IC,FLASH,SERIAL,SPI,4MX8,1.8V,4X3MM,DFN8	U4770	CRITICAL	SOC_ROM:BLANK

EFI ROM

PART#	QTY	DESCRIPTION	REFERENCE DESIGNATOR(S)	CRITICAL	BOM OPTION
335S00371	1	IC,SERIAL FLASH,128MBIT,1.8V,QE=1,WSON8	U2100	CRITICAL	EFI_ROM:BLANK

PART NUMBER	ALTERNATE FOR PART NUMBER	BOM OPTION	REF DES	COMMENTS:
335S00370	335S00371		ALL	Macronix
335S00376	335S00371		ALL	Adesto

VINAFIX.COM
苹果最新图纸

NOTICE OF PROPRIETARY PROPERTY:
THE INFORMATION CONTAINED HEREIN IS THE PROPRIETARY PROPERTY OF APPLE INC.
THE POSESSOR AGREES TO THE FOLLOWING:
I TO MAINTAIN THIS DOCUMENT IN CONFIDENCE
II NOT TO REPRODUCE OR COPY IT
III NOT TO REVEAL OR PUBLISH IT IN WHOLE OR PART
IV ALL RIGHTS RESERVED

BOM Groups

BOM GROUP	BOM OPTIONS
MLB_COMMON	SCHEM,PCBF,ALTERNATE,COMMON,MLB_PROGPARTS,MLB_USBC,MLB_POWER,MLB_WIRELESS,MLB_MECH1,MLB_MECH2,MLB_MISC,PVT
MLB_USBC	TBT_PCIE_4LANES,TBT_TR:PRQ,ACE:C0_BGA
MLB_PROGPARTS	BT_ROM:EVT2,SOC_ROM:BLANK,TBT_ROM:EVT2,WIFI_ROM:P0,SE:PROD_2017
MLB_POWER	PMU:A0_A
MLB_WIRELESS	WIRELESS:USI
MLB_MECH1	BRACKET,BUSBARLONG,BUSBARTOP,BUSBARBOTTOM
MLB_MECH2	SHLD_CAN_DRAM,SHLD_FNC_NAND,SHLD_CAN_TR,SHLD_FNC_SOC,SHLD_CAN_DPLXR
MLB_MISC	BOARDID0,BOARDID1,BOARDID2,BOARDID4,SYSDET:FET,NAND_VCC:2V5,BOOTCFG0

See <rdar://problem/39661910> for BOARDID straps

PART#	QTY	DESCRIPTION	REFERENCE DESIGNATOR(S)	CRITICAL	BOM OPTION
685-00251	1	COMMON PARTS,MLB_BTTF,X1032	CBOM	CRITICAL	CMN_PARTS_BOM
985-00733	1	DEV PARTS,MLB_BTTF,X1032	DEV1	CRITICAL	DEV_PARTS_BOM

Build Specific Groups

BOM GROUP	BOM OPTIONS
PROTO3	MAF,EFI_ROM:BLANK
PREEVT2	BOARDREV0,SAF,PCHFLTR:FERRITE
PVT	BOARDREV1,SAF,PCHFLTR:FERRITE

NAND Configs

BOM GROUP	BOM OPTIONS
NANDCFG:HPN1_256G_2L	NAND:HPN1_256G_2L,SSDJTAG:2L,SOC:B0_1G
NANDCFG:PMLC_128G_TO	NAND:PMLC_128G_TO_NM,SOC:B0_1G
NANDCFG:PMLC_128G_SD	NAND:PMLC_128G_SD_NM,SOC:B0_1G
NANDCFG:PMLC_256G_TO	NAND:PMLC_256G_TO_NM,SOC:B0_1G
NANDCFG:PMLC_256G_SD	NAND:PMLC_256G_SD_NM,SOC:B0_1G
NANDCFG:PMLC_512G_TO	NAND:PMLC_512G_TO_NM,SOC:B0_1G
NANDCFG:PMLC_512G_SD	NAND:PMLC_512G_SD_NM,SOC:B0_1G
NANDCFG:3DV4_1P5T_SS	NAND:3DV4_1P5T_SS_MG3,SOC:B0_2G

CPU DRAM SPD Straps

BOM GROUP	BOM OPTIONS
DRAMCFG:SAMSUNG_8GB	DRAM:SAMSUNG_8GB,RAMCFG0_L
DRAMCFG:SAMSUNG_16GB	DRAM:SAMSUNG_16GB,RAMCFG0_L,RAMCFG2_L,RAM_16GB
DRAMCFG:HYNIX_8GB	DRAM:HYNIX_8GB,RAMCFG0_L,RAMCFG1_L
DRAMCFG:HYNIX_16GB	DRAM:HYNIX_16GB,RAMCFG0_L,RAMCFG1_L,RAMCFG2_L,RAM_16GB
DRAMCFG:MICRON_8GB	DRAM:MICRON_8GB
DRAMCFG:MICRON_16GB	DRAM:MICRON_16GB,RAMCFG2_L,RAM_16GB

RAMCFGx strap is low if in table.

CPU DRAM CFG Chart

Vendor	CFG 1	CFG 0
Hynix	0	0
Samsung	1	0
Unused	0	1
Micron	1	1

Vendor	CFG 2
8GB	1
16GB	0

VINAFIX.COM

苹果最新图纸

PAGE TITLE
BOM Configuration

Apple Inc.

DRAWING NUMBER 051-04039 SIZE D
REVISION 2.0.0
BRANCH
PAGE 3 OF 145
SHEET 3 OF 85

NOTICE OF PROPRIETARY PROPERTY:
THE INFORMATION CONTAINED HEREIN IS THE PROPRIETARY PROPERTY OF APPLE INC.
THE POSESSOR AGREES TO THE FOLLOWING:
I TO MAINTAIN THIS DOCUMENT IN CONFIDENCE
II NOT TO REPRODUCE OR COPY IT
III NOT TO REVEAL OR PUBLISH IT IN WHOLE OR PART
IV ALL RIGHTS RESERVED

Mounting Bracket

PART#	QTY	DESCRIPTION	REFERENCE DESIGNATOR(S)	CRITICAL	BOM OPTION
806-12895	1	BRKT,MOUNTING,MLB,X1030	BRKT1	CRITICAL	BRACKET

Shield Cans

DRAM Shield Can

PART#	QTY	DESCRIPTION	REFERENCE DESIGNATOR(S)	CRITICAL	BOM OPTION
806-12387	1	SHIELD CAN,DRAM,X1030	SHLD1	CRITICAL	SHLD_CAN_DRAM

NAND Shield Fence

PART#	QTY	DESCRIPTION	REFERENCE DESIGNATOR(S)	CRITICAL	BOM OPTION
806-12384	1	SHIELD FENCE,MEMORY,SINGLE,X1030	SHLD2	CRITICAL	SHLD_FNC_NAND

TR Shield Can

PART#	QTY	DESCRIPTION	REFERENCE DESIGNATOR(S)	CRITICAL	BOM OPTION
806-12386	1	SHIELD CAN,TITAN RIDGE,X1030	SHLD3	CRITICAL	SHLD_CAN_TR

SOC/NAND Shield Fence

PART#	QTY	DESCRIPTION	REFERENCE DESIGNATOR(S)	CRITICAL	BOM OPTION
806-12385	1	SHIELD FENCE,GIBRALTOR AND MEMORY,X1030	SHLD4	CRITICAL	SHLD_FNC_SOC

Diplexer Shield Can

PART#	QTY	DESCRIPTION	REFERENCE DESIGNATOR(S)	CRITICAL	BOM OPTION
806-12650	1	SHIELD CAN,DIPLEX,SUS,X1030	SHLD5	CRITICAL	SHLD_CAN_DPLXR

Bus Bars

PART#	QTY	DESCRIPTION	REFERENCE DESIGNATOR(S)	CRITICAL	BOM OPTION
806-16920	2	BUSBAR,MLB,LONG,BOTTOM,X1032	BB0400,BB0403	CRITICAL	BUSBARLONG
806-16921	1	BUSBAR,MLB,TOP,X1032	BB0401	CRITICAL	BUSBARTOP
806-16922	1	BUSBAR,MLB,LONG,BOTTOM,X1032	BB0402	CRITICAL	BUSBARBOTTOM

Mounting Holes

998-03823

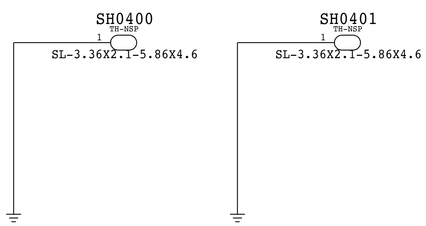

Heatsink Mounting Bosses

860-01043

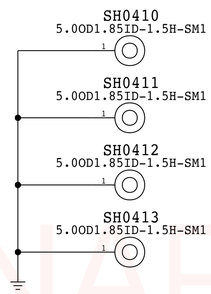

998-11113

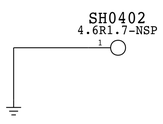

998-11114

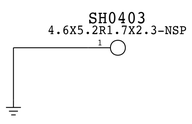

Antenna Cowling Bosses

860-00974

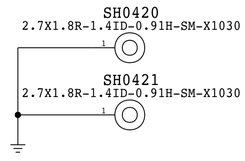

VINAFIX.COM

苹果最新图纸

BOM_COST_GROUP=MECHANICALS

PAGE TITLE: PD Parts

Apple Inc.

DRAWING NUMBER: 051-04039 SIZE: D

REVISION: 2.0.0

BRANCH:

PAGE: 4 OF 145

SHEET: 4 OF 85

NOTICE OF PROPRIETARY PROPERTY:
THE INFORMATION CONTAINED HEREIN IS THE PROPRIETARY PROPERTY OF APPLE INC.
THE POSESSOR AGREES TO THE FOLLOWING:
I TO MAINTAIN THIS DOCUMENT IN CONFIDENCE
II NOT TO REPRODUCE OR COPY IT
III NOT TO REVEAL OR PUBLISH IT IN WHOLE OR PART
IV ALL RIGHTS RESERVED

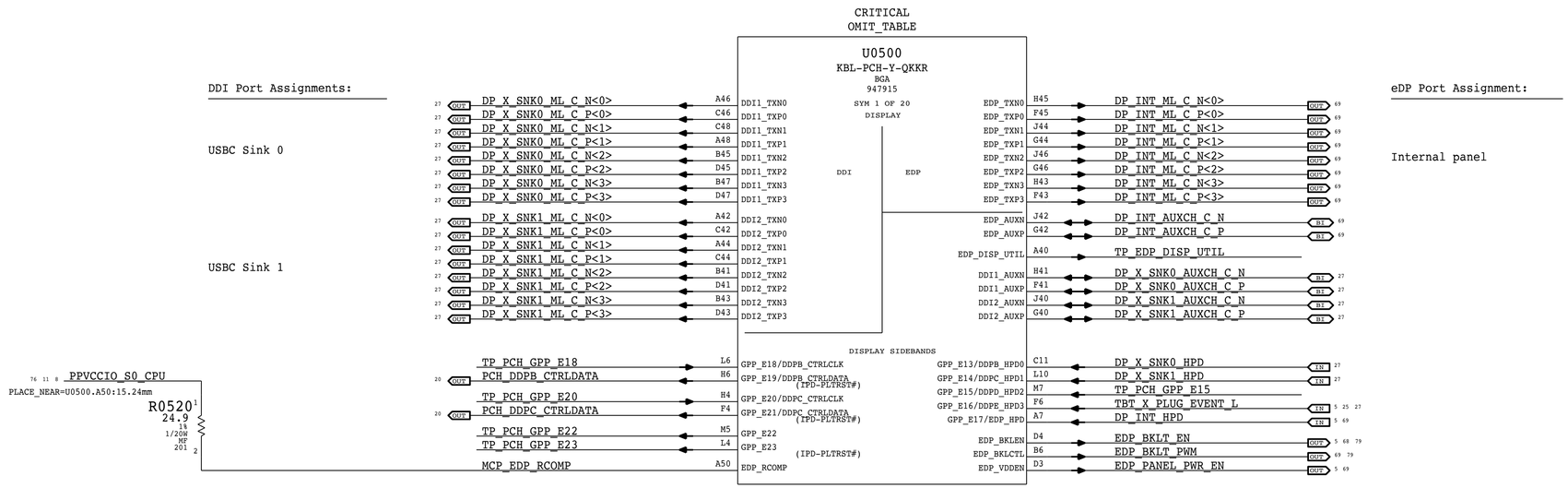

VINAFIX.COM

苹果最新图纸

BOM_COST_GROUP=CPU & CHIPSET

SYNC_MASTER=J122_MLB SYNC_DATE=03/30/2018

PAGE TITLE

CPU GFX

Apple Inc.

DRAWING NUMBER 051-04039 SIZE D

REVISION 2.0.0

BRANCH

PAGE 5 OF 145

SHEET 5 OF 85

NOTICE OF PROPRIETARY PROPERTY:
THE INFORMATION CONTAINED HEREIN IS THE PROPRIETARY PROPERTY OF APPLE INC.
THE POSESSOR AGREES TO THE FOLLOWING:
I TO MAINTAIN THIS DOCUMENT IN CONFIDENCE
II NOT TO REPRODUCE OR COPY IT
III NOT TO REVEAL OR PUBLISH IT IN WHOLE OR PART
IV ALL RIGHTS RESERVED

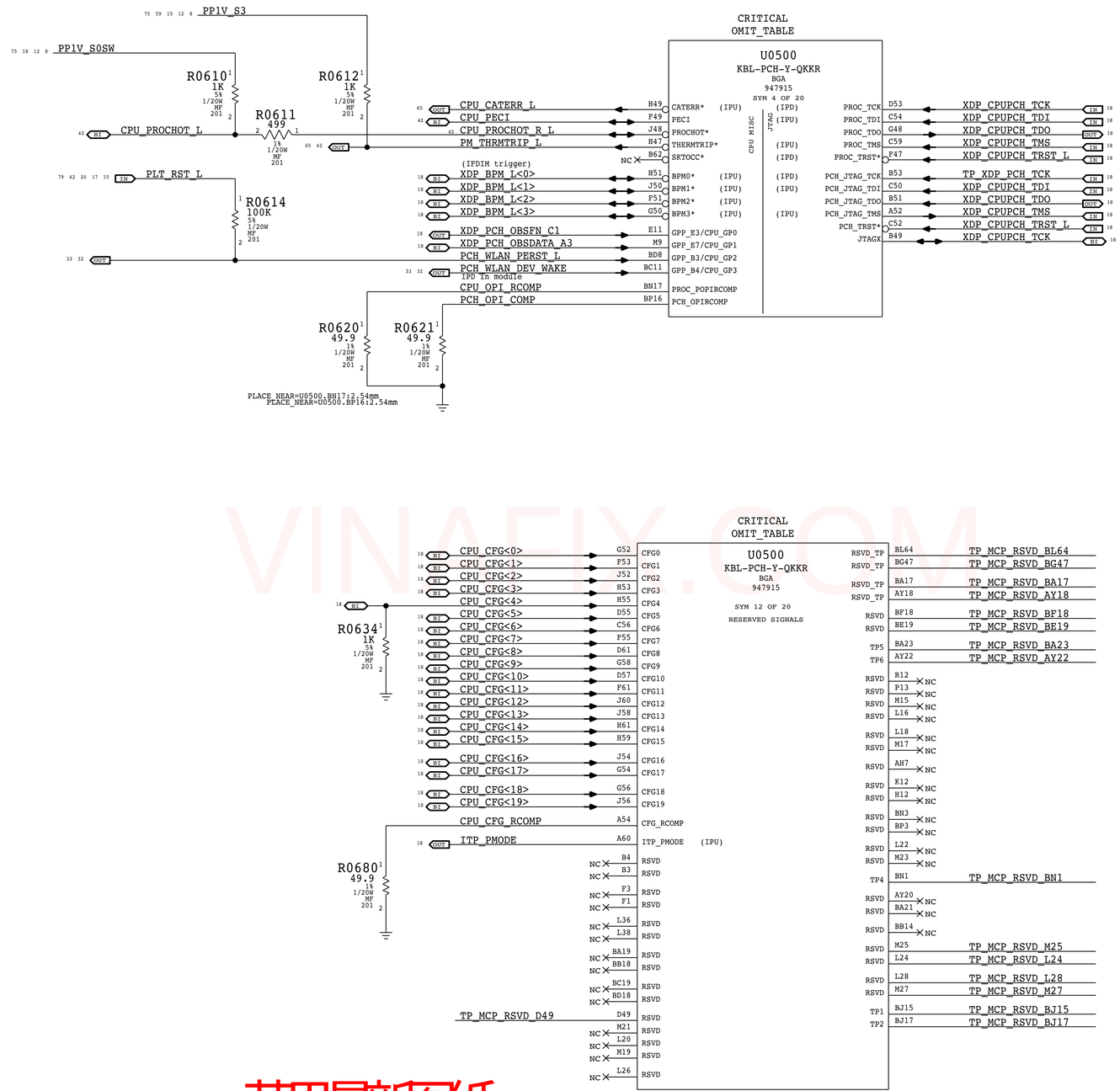

VINAFIX.COM

苹果最新图纸

BOM_COST_GROUP=CPU & CHIPSET

SYNC_MASTER=J122_MLB SYNC_DATE=03/30/2018

PAGE TITLE
CPU Misc/JTAG/CFG/RSVD

Apple Inc.

DRAWING NUMBER 051-04039 SIZE D

REVISION 2.0.0

BRANCH

PAGE 6 OF 145

SHEET 6 OF 85

NOTICE OF PROPRIETARY PROPERTY:
THE INFORMATION CONTAINED HEREIN IS THE PROPRIETARY PROPERTY OF APPLE INC.
THE POSESSOR AGREES TO THE FOLLOWING:
I TO MAINTAIN THIS DOCUMENT IN CONFIDENCE
II NOT TO REPRODUCE OR COPY IT
III NOT TO REVEAL OR PUBLISH IT IN WHOLE OR PART
IV ALL RIGHTS RESERVED

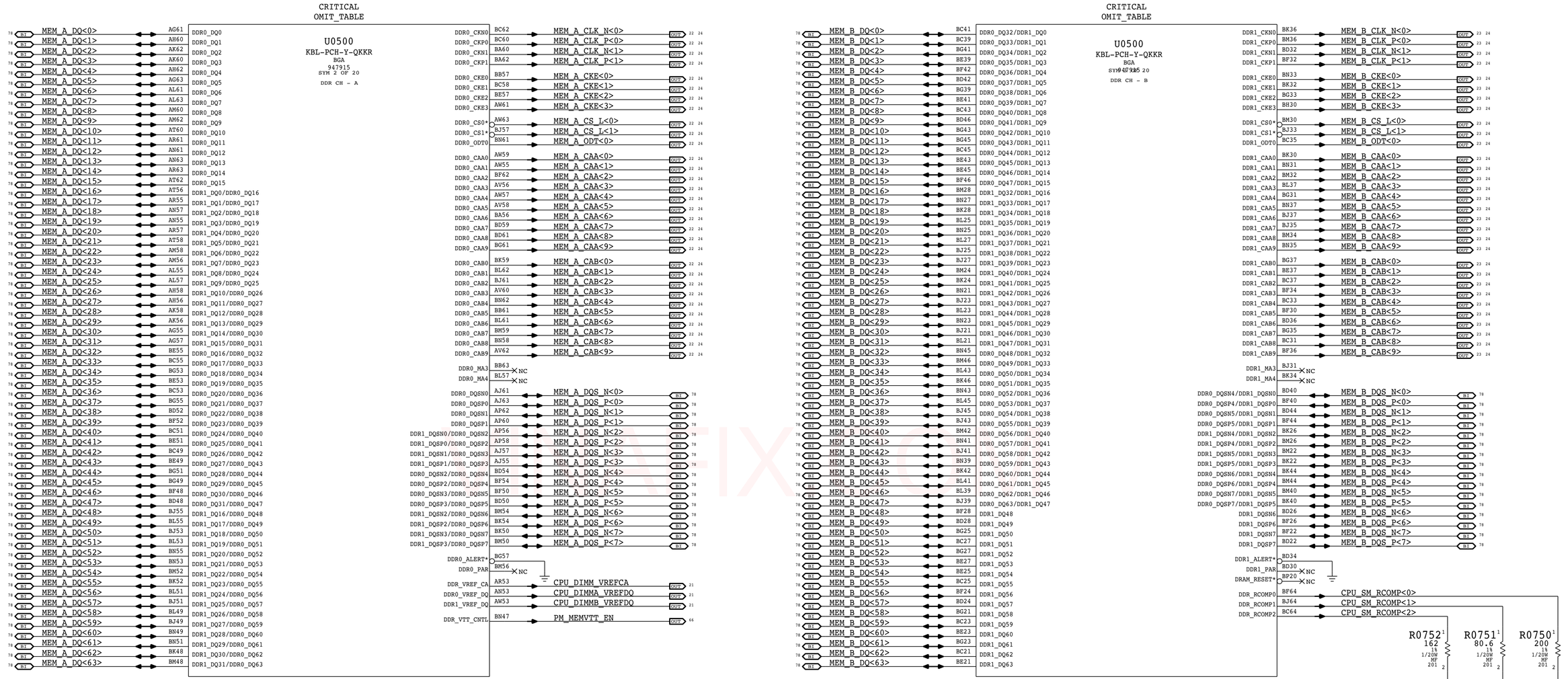

苹果最新图纸

BOM_COST_GROUP=CPU & CHIPSET

SYNC_MASTER=J122_MLB SYNC_DATE=03/30/2018

PAGE TITLE

CPU LPDDR3 Interface

Apple Inc.

DRAWING NUMBER 051-04039 SIZE D

REVISION 2.0.0

BRANCH

PAGE 7 OF 145

SHEET 7 OF 85

NOTICE OF PROPRIETARY PROPERTY:
THE INFORMATION CONTAINED HEREIN IS THE PROPRIETARY PROPERTY OF APPLE INC.
THE POSESSOR AGREES TO THE FOLLOWING:
I TO MAINTAIN THIS DOCUMENT IN CONFIDENCE
II NOT TO REPRODUCE OR COPY IT
III NOT TO REVEAL OR PUBLISH IT IN WHOLE OR PART
IV ALL RIGHTS RESERVED

SKL-ULX current estimates from Skylake Processor EDS vol 1, doc #544924, v0.94
VCCIO breakdown per 4/20/15 email from Srini

NOTE: Aliases not used on CPU supply outputs to avoid any extraneous connections.

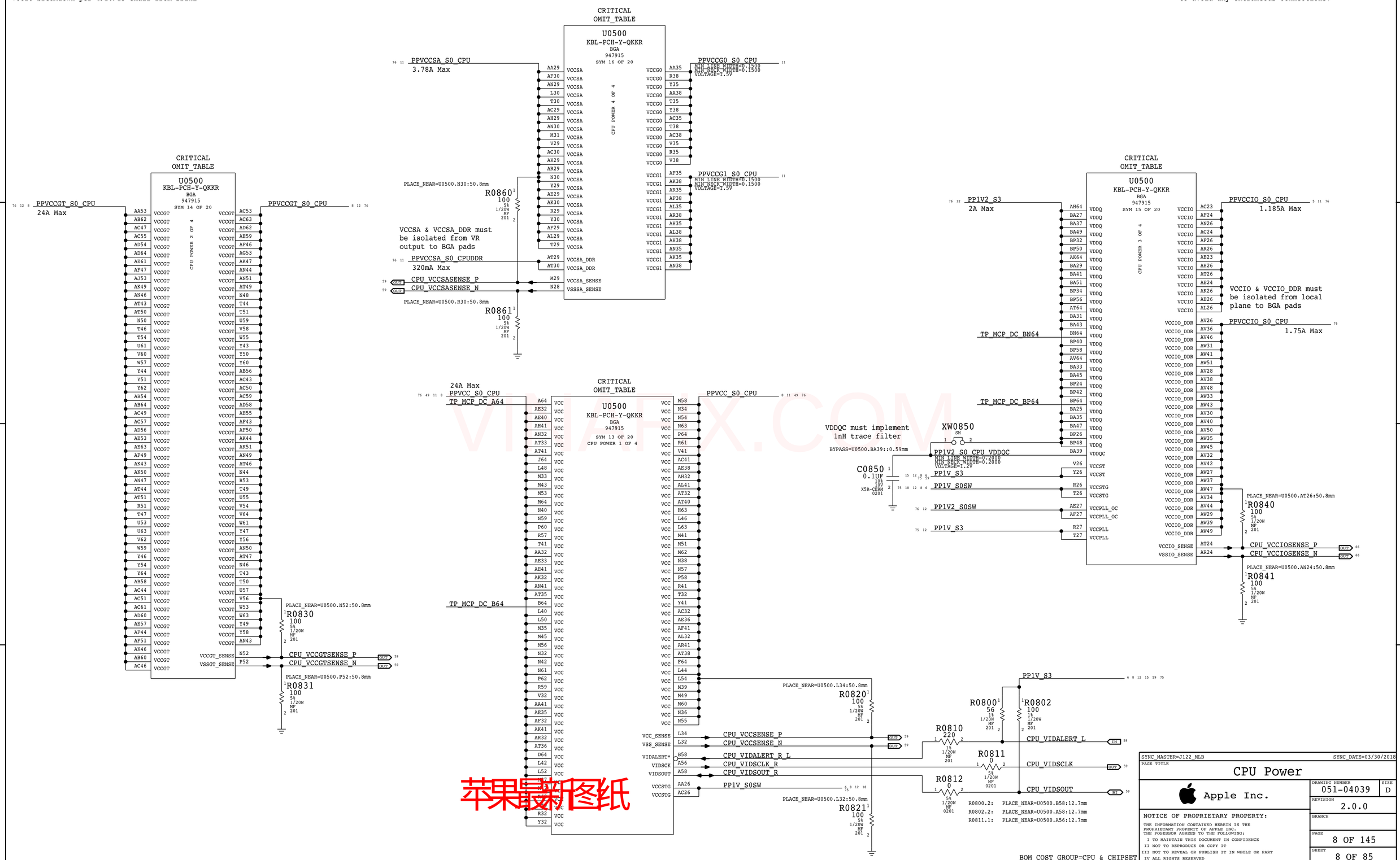

VIPARX.COM
苹果最新图纸

SPT-LP current estimates from Sunrise Point-LP PCH EDS vol 1, doc #545659, v1.2.
VCCAMPHYPLL_1P0 and VCCPRIM_1P0 / VCCPRIM_3P3 breakdowns from Srini email 4/13/15

NOTE: Aliases not used on CPU supply outputs
to avoid any extraneous connections.

CRITICAL
OMIT_TABLE

U0500
KBL-PCH-Y-QKKR
BGA
947915
SYM 17 OF 20
PCH POWER

Net	Pin	Power Pin	Load
PP1V_PRIM	AH18, AH19, AK18, AL18	VCCPRIM_1P0	370mA Max
PPVCC_PRIM_CORE	AE18, AE19, AF18, AF19, AR16, AT16	VCCPRIM_CORE	1.1A Max
PP1V_S5_PCH_DCPDSW	AL2, AM1	DCPDSW_1P0	MIN_LINE_WIDTH=0.2000, MIN_NECK_WIDTH=0.2000, VOLTAGE=1.0V
PP1V_PRIM	V1, W2	VCCMPHYAON_1P0	22mA Max
PP1V_PRIM	T1, T15, T16, U2	VCCMPHYGT_1P0	See EDS Table 10-5
PP1V_SUSSW_PCH_VCCAMPHYPLL	V15, V16	VCCAMPHYPLL_1P0	88mA Max
PP1V_SUS_PCH_VCCAPLL	AA18, AA19	VCCAPLL_1P0	26mA Max
PP1V_PRIM	AH13, AH15	VCCPRIM_1P0	168mA Max
PP3V3_S5	AL15, AM13	VCCDSW_3P3	71mA Max
PP3V3R1V8R1V5_S0_PCH_VCCHDA	AT23, AV22	VCCHDA	68/36/33mA @ 3.3/1.8/1.5V Max
PP1V8_S5	AT15, AV15	VCCSPI	11/7mA @ 3.3/1.8V Max
PP1V_PRIM	AA21, AA23, AK23, AL23, AN23, AR23	VCCSRAM_1P0	0.565A Max
PP3V3_S5	AH21, AK21	VCCPRIM_3P3	74mA Max
PP1V_PRIM	AR21, AT21	VCCPRIM_1P0	55mA Max
PP1V_PRIM	R15, R16	VCCAPLLEBB_1P0	33mA Max
PP1V8_S5	AT1, AU2	VCCPGPPA	20/9mA @ 3.3/1.8V Max
PP1V8_S5	AV1, AW2	VCCPGPPB	4/2mA @ 3.3/1.8V Max
PP1V8_S5	AH1, AJ2	VCCPGPPC	6/3mA @ 3.3/1.8V Max
PP1V8_S5	AF1, AG2	VCCPGPPD	8/3mA @ 3.3/1.8V Max
PP3V3_S5	AA2, AB1	VCCPGPPE	6/2mA @ 3.3/1.8V Max
PP1V8_S5	AN2, AP1	VCCPGPPF	33/161mA @ 3.3/1.8V Max
PP3V3_S5	AN15, AP13	VCCPGPPG	41/56mA @ 3.3/1.8V Max
PP3V3_S5	AC2, AD1	VCCPRIM_3P3	1mA Max
PP1V_PRIM	AA15, AA16	VCCPRIM_1P0	6mA Max
PP1V8_S5	AE15, AE16	VCCATS	6mA Max
PP3V3_S5	AK19, AL19	VCCRTCPRIM_3P3	<1mA Max
PP3V_G3H	AR19, AT19	VCCRTC	<1mA Max
PPVOUT_S0_PCH_DCPRTC	AT18, AV18	DCPRTC	MIN_LINE_WIDTH=0.2000, MIN_NECK_WIDTH=0.2000, VOLTAGE=1.0V
PP1V_PRIM	V18, Y18	VCCCLK1	35mA Max
PP1V_PRIM	V19, Y19	VCCCLK2	29mA Max
PP1V_SUS_PCH_VCCCLK3	V23, Y23	VCCCLK3	24mA Max
PP1V_SUS_PCH_VCCCLK4	V21, Y21	VCCCLK4	33mA Max
PP1V_SUS_PCH_VCCCLK5	R21, R23	VCCCLK5	4mA Max
PP1V_PRIM	R19, T19	VCCCLK6	10mA Max
TP_PCH_CORE_VID<0>	BA13	GPP_B0/CORE_VID0	
TP_PCH_CORE_VID<1>	BB12	GPP_B1/CORE_VID1	

C0920 1.0UF 20% 6.3V X5R 0201-1
BYPASS=U0500.AL2::5.32mm

Must not exceed 3.2V max

C0900 0.1UF 10% 10V X5R-CERM 0201
C0901 1.0UF 20% 6.3V X5R 0201-1
BYPASS=U0500.AR19::2.10mm
BYPASS=U0500.AT19::2.10mm

C0910 0.1UF 10% 10V X5R-CERM 0201
BYPASS=U0500.AT18::1.08mm

VINAFIX.COM

苹果最新图纸

BOM_COST_GROUP=CPU & CHIPSET

SYNC_MASTER=J122_MLB SYNC_DATE=03/30/2018

PAGE TITLE
PCH Power

Apple Inc.

DRAWING NUMBER 051-04039 SIZE D
REVISION 2.0.0
BRANCH
PAGE 9 OF 145
SHEET 9 OF 85

NOTICE OF PROPRIETARY PROPERTY:
THE INFORMATION CONTAINED HEREIN IS THE PROPRIETARY PROPERTY OF APPLE INC.
THE POSESSOR AGREES TO THE FOLLOWING:
I TO MAINTAIN THIS DOCUMENT IN CONFIDENCE
II NOT TO REPRODUCE OR COPY IT
III NOT TO REVEAL OR PUBLISH IT IN WHOLE OR PART
IV ALL RIGHTS RESERVED

CRITICAL
OMIT_TABLE

U0500
KBL-PCH-Y-QKKR
BGA
947915
SYM 18 OF 20
GND 1 OF 3

A14	VSS	VSS	K23
AA36	VSS	VSS	K33
AA47	VSS	VSS	K43
AA57	VSS	VSS	K53
AC15	VSS	VSS	L61
AC27	VSS	VSS	N20
AE10	VSS	VSS	R10
AE43	VSS	VSS	R24
AE50	VSS	VSS	R40
AF16	VSS	VSS	R49
AF40	VSS	VSS	T13
AF62	VSS	VSS	T33
AH24	VSS	VSS	T60
AH40	VSS	VSS	V27
AH49	VSS	VSS	V43
AK1	VSS	VSS	V50
AK24	VSS	VSS	Y15
AK40	VSS	VSS	Y33
AL16	VSS	VSS	Y9
AL33	VSS	VSS	AA24
AL46	VSS	VSS	AA40
AL53	VSS	VSS	AA49
AN18	VSS	VSS	AA59
AN33	VSS	VSS	AC16
AP64	VSS	VSS	AC33
AR2	VSS	VSS	AE2
AR4	VSS	VSS	AE44
AR47	VSS	VSS	AE51
AR6	VSS	VSS	AF21
AU55	VSS	VSS	AF54
AV16	VSS	VSS	AF64
AW17	VSS	VSS	AH27
AY16	VSS	VSS	AH43
AY32	VSS	VSS	AH50
AY42	VSS	VSS	AK11
AY52	VSS	VSS	AK27
BA5	VSS	VSS	AK5
BA9	VSS	VSS	AL21
BB28	VSS	VSS	AL36
BB38	VSS	VSS	AL47
BB48	VSS	VSS	AL59
BC17	VSS	VSS	AN19
BD56	VSS	VSS	AN36
BE33	VSS	VSS	AR10
BF56	VSS	VSS	AR27
BG2	VSS	VSS	AR40
BG8	VSS	VSS	AR49
BH28	VSS	VSS	AR8
BH40	VSS	VSS	AU57
BH50	VSS	VSS	AV20
BJ29	VSS	VSS	AW19
BK56	VSS	VSS	AY24
BL35	VSS	VSS	AY34
BM16	VSS	VSS	AY44
BP36	VSS	VSS	BA53
BP54	VSS	VSS	BB20
D10	VSS	VSS	BB30
E14	VSS	VSS	BB40
E24	VSS	VSS	BB50
E34	VSS	VSS	BC29
E44	VSS	VSS	BD63
E54	VSS	VSS	BE35
J14	VSS	VSS	BF59
J9	VSS	VSS	BG29
AH47	VSS	VSS	AL30
AJ59	VSS	VSS	AL44
AK16	VSS	VSS	AL51
AK36	VSS	VSS	AN16
AK9	VSS	VSS	AN27
V24	VSS	VSS	BA7

CRITICAL
OMIT_TABLE

U0500
KBL-PCH-Y-QKKR
BGA
947915
SYM 19 OF 20
GND 2 OF 3

BH20	VSS	VSS	AR50
BH32	VSS	VSS	AT27
BH42	VSS	VSS	AU59
BH52	VSS	VSS	AV24
BJ47	VSS	VSS	AY26
BL1	VSS	VSS	AW21
BL47	VSS	VSS	AY36
BM18	VSS	VSS	AY46
BN6	VSS	VSS	BA1
BP38	VSS	VSS	BB22
BP60	VSS	VSS	BA58
E16	VSS	VSS	BB32
E26	VSS	VSS	BB42
E36	VSS	VSS	BB52
R43	VSS	VSS	BE12
E46	VSS	VSS	BC47
E56	VSS	VSS	BE47
J3	VSS	VSS	BG12
K15	VSS	VSS	BG4
K25	VSS	VSS	BH34
K35	VSS	VSS	BH22
K45	VSS	VSS	BH44
K55	VSS	VSS	BH54
M3	VSS	VSS	BJ62
N22	VSS	VSS	BL29
R30	VSS	VSS	BM20
R50	VSS	VSS	BL8
T18	VSS	VSS	BP22
T36	VSS	VSS	BP44
T62	VSS	VSS	E18
V30	VSS	VSS	E28
V44	VSS	VSS	D6
V51	VSS	VSS	E38
Y16	VSS	VSS	E48
Y36	VSS	VSS	E59
Y7	VSS	VSS	K17
AA27	VSS	VSS	J5
AA43	VSS	VSS	K27
AA50	VSS	VSS	K37
AA61	VSS	VSS	K47
AC18	VSS	VSS	N14
AC36	VSS	VSS	L14
AE21	VSS	VSS	N24
AE46	VSS	VSS	R33
AE8	VSS	VSS	R44
AF23	VSS	VSS	T21
AF56	VSS	VSS	R55
AG59	VSS	VSS	T40
AH30	VSS	VSS	T64
AH44	VSS	VSS	V33
AH51	VSS	VSS	Y1
AK13	VSS	VSS	V46
AK3	VSS	VSS	Y24
AK54	VSS	VSS	Y40
AL24	VSS	VSS	AA30
AL40	VSS	VSS	AA51
AL49	VSS	VSS	AA44
AN54	VSS	VSS	AA63
AN21	VSS	VSS	AC19
AN40	VSS	VSS	AC40
AR12	VSS	VSS	AE47
AR30	VSS	VSS	AE30
AR43	VSS	VSS	AF13
AP54	VSS	VSS	AU53
AR18	VSS	VSS	AU63
AR36	VSS	VSS	AV54
AR46	VSS	VSS	AW25
AR59	VSS	VSS	AY30
BA3	VSS	VSS	AY50

CRITICAL
OMIT_TABLE

U0500
KBL-PCH-Y-QKKR
BGA
947915
SYM 20 OF 20
GND 3 OF 3

AF33	VSS	VSS	R46
AF58	VSS	VSS	R6
AH16	VSS	VSS	T23
AH33	VSS	VSS	T56
AH46	VSS	VSS	V13
AH54	VSS	VSS	V36
AK15	VSS	VSS	V47
AK33	VSS	VSS	Y11
AK7	VSS	VSS	Y27
AL27	VSS	VSS	Y5
AL43	VSS	VSS	BB26
AL50	VSS	VSS	BB36
AM64	VSS	VSS	BB46
AN24	VSS	VSS	BB59
AN59	VSS	VSS	BD38
AR15	VSS	VSS	BE31
AR33	VSS	VSS	BF38
AR44	VSS	VSS	BG17
AR51	VSS	VSS	BG63
AT54	VSS	VSS	BH26
AU61	VSS	VSS	BH38
AV52	VSS	VSS	BH48
AW23	VSS	VSS	BH59
AY28	VSS	VSS	BK38
AY38	VSS	VSS	BL33
AY48	VSS	VSS	BM14
BA11	VSS	VSS	BN29
BA64	VSS	VSS	BP30
BB24	VSS	VSS	BP52
BB34	VSS	VSS	C40
BB44	VSS	VSS	D8
BB54	VSS	VSS	E22
BD20	VSS	VSS	E32
BE29	VSS	VSS	E42
BF20	VSS	VSS	E52
BG15	VSS	VSS	G14
BG6	VSS	VSS	J7
BH24	VSS	VSS	K21
BH36	VSS	VSS	K31
BH46	VSS	VSS	K41
BH56	VSS	VSS	K51
BK20	VSS	VSS	L59
BL31	VSS	VSS	N18
BM11	VSS	VSS	P54
BM38	VSS	VSS	R2
BP28	VSS	VSS	R4
BP46	VSS	VSS	R47
C14	VSS	VSS	R8
D62	VSS	VSS	T24
E20	VSS	VSS	T58
E30	VSS	VSS	Y3
E40	VSS	VSS	AA33
E50	VSS	VSS	AA46
F62	VSS	VSS	AA55
J62	VSS	VSS	AB13
K19	VSS	VSS	AC21
K29	VSS	VSS	AD13
K39	VSS	VSS	AE4
K49	VSS	VSS	AE49
L57	VSS	VSS	AF15
N16	VSS	VSS	AF36
N26	VSS	VSS	AF60
R18	VSS	VSS	AH23
R36	VSS	VSS	BP1 — TP_MCP_DC_BP1
AY40	VSS	VSS	A5 — TP_MCP_DC_A5
V49	VSS	VSS	D1 — TP_MCP_DC_D1
Y13	VSS	VSS	BP62 — TP_MCP_DC_BP62
AH36	VSS		
V40	VSS		

VINAFIX.COM

苹果最新图纸

BOM_COST_GROUP=CPU & CHIPSET

SYNC_MASTER=J122_MLB SYNC_DATE=03/30/2018

PAGE TITLE
CPU & PCH Grounds

Apple Inc.

DRAWING NUMBER 051-04039
SIZE D
REVISION 2.0.0
BRANCH
PAGE 10 OF 145
SHEET 10 OF 85

NOTICE OF PROPRIETARY PROPERTY:
THE INFORMATION CONTAINED HEREIN IS THE PROPRIETARY PROPERTY OF APPLE INC.
THE POSESSOR AGREES TO THE FOLLOWING:
I TO MAINTAIN THIS DOCUMENT IN CONFIDENCE
II NOT TO REPRODUCE OR COPY IT
III NOT TO REVEAL OR PUBLISH IT IN WHOLE OR PART
IV ALL RIGHTS RESERVED

All Intel recommendations from Intel doc #561280 KBL-UY PDG and #594883 KBL-YR PDG addendum

CPU VCORE Decoupling

Intel implementation (#561280, Table 49-2): 20x 0.1uF 0201, 8x 10uF 0402, 6x 47uF 0805
Intel implementation (#594883, AML): 20x 0.1uF 0201, 10x 1uF 0201, 9x 10uF 0402, 6x 100uF 0805
Apple implementation: 9x 0.1uF 0201, 21x 1uF 0201, 12x 20uF 0402 STUFF (6x NOSTUFF), 2x 220uF D1 STUFF (1x NOSTUFF)

76 49 8 PPVCC_S0_CPU

CRITICAL C1100 1UF 20% 6.3V X6S-CERM 0201	C1101 0.1UF 10% 6.3V X6S 0201	CRITICAL C1102 1UF 20% 6.3V X6S-CERM 0201	CRITICAL C1103 1UF 20% 6.3V X6S-CERM 0201	CRITICAL C1104 1UF 20% 6.3V X6S-CERM 0201	CRITICAL C1105 1UF 20% 6.3V X6S-CERM 0201	CRITICAL C1106 1UF 20% 6.3V X6S-CERM 0201	CRITICAL C1107 1UF 20% 6.3V X6S-CERM 0201	C1108 0.1UF 10% 6.3V X6S 0201	CRITICAL C1109 1UF 20% 6.3V X6S-CERM 0201	C110A 0.1UF 10% 6.3V X6S 0201	CRITICAL C110B 1UF 20% 6.3V X6S-CERM 0201	CRITICAL C110C 1UF 20% 6.3V X6S-CERM 0201	C110D 0.1UF 10% 6.3V X6S 0201	C110E 0.1UF 10% 6.3V X6S 0201	CRITICAL C110F 1UF 20% 6.3V X6S-CERM 0201	CRITICAL C1110 1UF 20% 6.3V X6S-CERM 0201	CRITICAL C1111 1UF 20% 6.3V X6S-CERM 0201	CRITICAL C1112 1UF 20% 6.3V X6S-CERM 0201	CRITICAL C1113 1UF 20% 6.3V X6S-CERM 0201	CRITICAL C1114 1UF 20% 6.3V X6S-CERM 0201	C1115 0.1UF 10% 6.3V X6S 0201

CRITICAL C1116 1UF 20% 6.3V X6S-CERM 0201	C1117 0.1UF 10% 6.3V X6S 0201	C1118 0.1UF 10% 6.3V X6S 0201	CRITICAL C1119 1UF 20% 6.3V X6S-CERM 0201	C111A 0.1UF 10% 6.3V X6S 0201	CRITICAL C111B 1UF 20% 6.3V X6S-CERM 0201	CRITICAL C111C 1UF 20% 6.3V X6S-CERM 0201	CRITICAL C111D 1UF 20% 6.3V X6S-CERM 0201

CRITICAL C1120 20UF 20% 6.3V X6S-CERM 0402	CRITICAL C1121 20UF 20% 6.3V X6S-CERM 0402	CRITICAL C1122 20UF 20% 6.3V X6S-CERM 0402	CRITICAL C1123 20UF 20% 6.3V X6S-CERM 0402	CRITICAL C1124 20UF 20% 6.3V X6S-CERM 0402	CRITICAL C1125 20UF 20% 6.3V X6S-CERM 0402	CRITICAL C1126 20UF 20% 6.3V X6S-CERM 0402	CRITICAL C1127 20UF 20% 6.3V X6S-CERM 0402	CRITICAL C1128 20UF 20% 6.3V X6S-CERM 0402	CRITICAL C1129 20UF 20% 6.3V X6S-CERM 0402	CRITICAL C112A 20UF 20% 6.3V X6S-CERM 0402	CRITICAL C112B 20UF 20% 6.3V X6S-CERM 0402	NO STUFF CRITICAL C112C 20UF 20% 6.3V X6S-CERM 0402	NO STUFF CRITICAL C112D 20UF 20% 6.3V X6S-CERM 0402	NO STUFF CRITICAL C112E 20UF 20% 6.3V X6S-CERM 0402	NO STUFF CRITICAL C112F 20UF 20% 6.3V X6S-CERM 0402	NO STUFF CRITICAL C112G 20UF 20% 6.3V X6S-CERM 0402	NO STUFF CRITICAL C112H 20UF 20% 6.3V X6S-CERM 0402	CRITICAL C1130 220UF 20% 2V ELEC SM	CRITICAL C1131 220UF 20% 2V ELEC SM	NO STUFF CRITICAL C1134 220UF 20% 2V ELEC SM

CPU VCORE G0 Decoupling

Intel implementation (#561280, Table 49-2): 12x 0.1uF 0201
Intel implementation (#594883, AML): 10x 0.1uF 0201, 2x 1uF 0201
Apple implementation : 10x 0.1uF 0201, 2x 1uF 0201

8 PPVCCG0_S0_CPU

C1140 0.1UF 10% 6.3V X6S 0201	C1141 0.1UF 10% 6.3V X6S 0201	C1142 0.1UF 10% 6.3V X6S 0201	C1143 0.1UF 10% 6.3V X6S 0201	C1146 0.1UF 10% 6.3V X6S 0201	C1147 0.1UF 10% 6.3V X6S 0201	C1148 0.1UF 10% 6.3V X6S 0201	C1149 0.1UF 10% 6.3V X6S 0201	C114A 0.1UF 10% 6.3V X6S 0201	C114B 0.1UF 10% 6.3V X6S 0201	CRITICAL C1144 1UF 20% 6.3V X6S-CERM 0201	CRITICAL C1145 1UF 20% 6.3V X6S-CERM 0201

CPU VCORE G1 Decoupling

Intel implementation (#561280, Table 49-2): 12x 0.1uF 0201
Intel implementation (#594883, AML): 10x 0.1uF 0201, 2x 1uF 0201
Apple implementation : 10x 0.1uF 0201, 2x 1uF 0201

8 PPVCCG1_S0_CPU

C1150 0.1UF 10% 6.3V X6S 0201	C1151 0.1UF 10% 6.3V X6S 0201	C1152 0.1UF 10% 6.3V X6S 0201	C1153 0.1UF 10% 6.3V X6S 0201	C1154 0.1UF 10% 6.3V X6S 0201	C1157 0.1UF 10% 6.3V X6S 0201	C1158 0.1UF 10% 6.3V X6S 0201	C1159 0.1UF 10% 6.3V X6S 0201	C115A 0.1UF 10% 6.3V X6S 0201	C115B 0.1UF 10% 6.3V X6S 0201	CRITICAL C1155 1UF 20% 6.3V X6S-CERM 0201	CRITICAL C1156 1UF 20% 6.3V X6S-CERM 0201

VINAFIX.COM

CPU VCCIO Decoupling

Intel implementation (#561280, Table 49-2): 13x 0.1uF 0201, 1x 1uF 0402
Apple implementation : 13x 0.1uF 0201, 1x 1uF 0402, 7x 20uF 0402 (2x 20uF on VR page), 1x 220uF D1

76 8 5 PPVCCIO_S0_CPU

C1160 0.1UF 10% 6.3V X6S 0201	C1161 0.1UF 10% 6.3V X6S 0201	C1162 0.1UF 10% 6.3V X6S 0201	C1163 0.1UF 10% 6.3V X6S 0201	C1164 0.1UF 10% 6.3V X6S 0201	C1165 0.1UF 10% 6.3V X6S 0201	C1166 0.1UF 10% 6.3V X6S 0201	C1167 0.1UF 10% 6.3V X6S 0201	C1168 0.1UF 10% 6.3V X6S 0201	C1169 0.1UF 10% 6.3V X6S 0201	C116A 0.1UF 10% 6.3V X6S 0201	C116B 0.1UF 10% 6.3V X6S 0201	C116C 0.1UF 10% 6.3V X6S 0201

C1177 1.0UF 20% 6.3V X5R 0201-1	CRITICAL C1178 20UF 20% 2.5V X6S-CERM 0402-1	CRITICAL C1179 20UF 20% 2.5V X6S-CERM 0402-1	CRITICAL C117A 20UF 20% 2.5V X6S-CERM 0402-1	CRITICAL C117B 20UF 20% 2.5V X6S-CERM 0402-1	CRITICAL C117C 20UF 20% 2.5V X6S-CERM 0402-1	CRITICAL C117D 20UF 20% 2.5V X6S-CERM 0402-1	CRITICAL C117E 20UF 20% 2.5V X6S-CERM 0402-1	CRITICAL C117G 220UF 20% 2V ELEC SM

CPU VCCSA Decoupling

Intel implementation (#561280, Table 49-2): 1x 1uF 0201, 4x 22uF 0603
Apple implementation : 6x 1uF 0201, 2x 2.2uF 0402, 3x 10uF 0402, 1x 120uF D1

76 8 PPVCCSA_S0_CPU

CRITICAL C1180 1UF 20% 6.3V X6S-CERM 0201	CRITICAL C1181 1UF 20% 6.3V X6S-CERM 0201	CRITICAL C1182 1UF 20% 6.3V X6S-CERM 0201	CRITICAL C1183 1UF 20% 6.3V X6S-CERM 0201	CRITICAL C1184 1UF 20% 6.3V X6S-CERM 0201	CRITICAL C118A 1UF 20% 6.3V X6S-CERM 0201	CRITICAL C118B 2.2UF 20% 25V X6S-CERM 0402	CRITICAL C118C 2.2UF 20% 25V X6S-CERM 0402	CRITICAL C118D 10UF 20% 6.3V CER-X6S 0402	CRITICAL C118E 10UF 20% 6.3V CER-X6S 0402	CRITICAL C118F 10UF 20% 6.3V CER-X6S 0402	CRITICAL C1190 120UF 20% 2.5V PART-POLY CASE-B2-SM

CPU VCCSA DDR Decoupling

Intel implementation (#561280, Table 49-2): 1x 0.1uF 0201, 1x 22uF 0603
Apple implementation : 1x 1uF 0201, 1x 10uF 0402

76 8 PPVCCSA_S0_CPUDDR

CRITICAL C1195 1UF 20% 6.3V X6S-CERM 0201	CRITICAL C1197 10UF 20% 6.3V CER-X6S 0402

苹果最新图纸

BOM_COST_GROUP=CPU & CHIPSET

SYNC_MASTER=J122_MLB SYNC_DATE=03/30/2018

PAGE TITLE: CPU Decoupling 1

Apple Inc.

DRAWING NUMBER: 051-04039 SIZE: D
REVISION: 2.0.0
BRANCH:
PAGE: 11 OF 145
SHEET: 11 OF 85

NOTICE OF PROPRIETARY PROPERTY:
THE INFORMATION CONTAINED HEREIN IS THE PROPRIETARY PROPERTY OF APPLE INC.
THE POSESSOR AGREES TO THE FOLLOWING:
I TO MAINTAIN THIS DOCUMENT IN CONFIDENCE
II NOT TO REPRODUCE OR COPY IT
III NOT TO REVEAL OR PUBLISH IT IN WHOLE OR PART
IV ALL RIGHTS RESERVED

All Intel recommendations from Intel doc #561280 KBL-UY PDG and #594883 KBL-YR PDG addendum

CPU GT Decoupling

Intel implementation (#561280, Table 49-2): 12x 0.1uF 0201, 2x 1uF 0402, 9x 47uF 0805
Apple implementation: 24x 0.1uF 0201, 2x 1uF 0201, 10x 20uF 0402 STUFF (6x NOSTUFF), 2x 220uF D1 STUFF

76 8 PPVCCGT_S0_CPU

C1200 0.1UF 10% 6.3V X6S 0201	C1201 0.1UF 10% 6.3V X6S 0201	C1202 0.1UF 10% 6.3V X6S 0201	C1203 0.1UF 10% 6.3V X6S 0201	C1204 0.1UF 10% 6.3V X6S 0201	C1205 0.1UF 10% 6.3V X6S 0201	C1206 0.1UF 10% 6.3V X6S 0201	CRITICAL C1207 1UF 20% 6.3V X6S-CERM 0201	C1208 0.1UF 10% 6.3V X6S 0201	CRITICAL C1209 1UF 20% 6.3V X6S-CERM 0201	C1210 0.1UF 10% 6.3V X6S 0201	C1211 0.1UF 10% 6.3V X6S 0201	C1212 0.1UF 10% 6.3V X6S 0201
C1213 0.1UF 10% 6.3V X6S 0201	C1214 0.1UF 10% 6.3V X6S 0201	C1215 0.1UF 10% 6.3V X6S 0201	C1216 0.1UF 10% 6.3V X6S 0201	C1217 0.1UF 10% 6.3V X6S 0201	C1218 0.1UF 10% 6.3V X6S 0201	C1219 0.1UF 10% 6.3V X6S 0201	C1220 0.1UF 10% 6.3V X6S 0201	C1221 0.1UF 10% 6.3V X6S 0201	C1222 0.1UF 10% 6.3V X6S 0201	C1223 0.1UF 10% 6.3V X6S 0201	C1224 0.1UF 10% 6.3V X6S 0201	C1225 0.1UF 10% 6.3V X6S 0201
CRITICAL C1254 20UF 20% 2.5V X6S-CERM 0402	CRITICAL C1255 20UF 20% 2.5V X6S-CERM 0402	CRITICAL C1256 20UF 20% 2.5V X6S-CERM 0402	CRITICAL C1257 20UF 20% 2.5V X6S-CERM 0402	CRITICAL C1258 20UF 20% 2.5V X6S-CERM 0402	CRITICAL C1259 20UF 20% 2.5V X6S-CERM 0402	CRITICAL C125A 20UF 20% 2.5V X6S-CERM 0402	CRITICAL C125B 20UF 20% 2.5V X6S-CERM 0402	CRITICAL C125C 20UF 20% 2.5V X6S-CERM 0402	CRITICAL C125D 20UF 20% 2.5V X6S-CERM 0402	CRITICAL C125E 20UF 20% 2.5V X6S-CERM 0402	CRITICAL C125F 20UF 20% 2.5V X6S-CERM 0402	NO STUFF CRITICAL C125G 20UF 20% 2.5V X6S-CERM 0402
NO STUFF CRITICAL C125H 20UF 20% 2.5V X6S-CERM 0402	NO STUFF CRITICAL C125I 20UF 20% 2.5V X6S-CERM 0402	NO STUFF CRITICAL C125J 20UF 20% 2.5V X6S-CERM 0402	CRITICAL C1264 220UF 20% 2V ELEC SM	CRITICAL C1265 220UF 20% 2V ELEC SM								

CPU VDDQ DECOUPLING

Intel implementation (#561280, Table 49-2): 18x 0.1uF 0201
Apple implementation: 18x 0.1uF 0201

76 8 PP1V2_S3

C1270 0.1UF 10% 6.3V X6S 0201	C1271 0.1UF 10% 6.3V X6S 0201	C1272 0.1UF 10% 6.3V X6S 0201	C1273 0.1UF 10% 6.3V X6S 0201	C1274 0.1UF 10% 6.3V X6S 0201	C1275 0.1UF 10% 6.3V X6S 0201	C1276 0.1UF 10% 6.3V X6S 0201	C1277 0.1UF 10% 6.3V X6S 0201	C1278 0.1UF 10% 6.3V X6S 0201	C1279 0.1UF 10% 6.3V X6S 0201
C1280 0.1UF 10% 6.3V X6S 0201	C1281 0.1UF 10% 6.3V X6S 0201	C1282 0.1UF 10% 6.3V X6S 0201	C1283 0.1UF 10% 6.3V X6S 0201	C1284 0.1UF 10% 6.3V X6S 0201	C1285 0.1UF 10% 6.3V X6S 0201	C1286 0.1UF 10% 6.3V X6S 0201	C1287 0.1UF 10% 6.3V X6S 0201		

CPU VCCST BYPASS
(CPU 1.0V SUSTAIN PWR)
75 59 15 8 6 PP1V_S3

C1290 0.1UF 10% 6.3V X6S 0201
BYPASS=U0500.V26::2.38mm

CPU VCCSTG BYPASS
(CPU 1.0V SUSTAIN GATED PWR)
75 18 8 6 PP1V_S0SW

C1292 0.1UF 10% 6.3V X6S 0201
BYPASS=U0500.R26::4.20mm

CPU VCCPLL_OC BYPASS
(CPU 1.2V PLL PWR)
76 8 PP1V2_S0SW

C1294 0.1UF 10% 6.3V X6S 0201
BYPASS=U0500.AE27::2.07mm

CPU VCCPLL BYPASS
(CPU 1.0V DIGITAL PLL PWR)
75 8 PP1V_S3

C1296 0.1UF 10% 6.3V X6S 0201
BYPASS=U0500.R27::1.99mm

VINAFIX.COM

苹果最新图纸

NOTE: Bypass calcs based on 0.1mm trace width with worst case stackup and 500pH added for power/ground via pair.

BOM_COST_GROUP=CPU & CHIPSET

SYNC_MASTER=J122_MLB SYNC_DATE=03/30/2018

PAGE TITLE: CPU Decoupling 2

Apple Inc.

DRAWING NUMBER: 051-04039 SIZE: D
REVISION: 2.0.0
BRANCH:
PAGE: 12 OF 145
SHEET: 12 OF 85

NOTICE OF PROPRIETARY PROPERTY:
THE INFORMATION CONTAINED HEREIN IS THE PROPRIETARY PROPERTY OF APPLE INC.
THE POSESSOR AGREES TO THE FOLLOWING:
I TO MAINTAIN THIS DOCUMENT IN CONFIDENCE
II NOT TO REPRODUCE OR COPY IT
III NOT TO REVEAL OR PUBLISH IT IN WHOLE OR PART
IV ALL RIGHTS RESERVED

PCH VCCDSW_3P3 BYPASS
(PCH 3.3V DSW PWR)
PP3V3_S5
C1300 0.1UF 10% 6.3V X6S 0201
BYPASS=U0500.AL15::1.96mm

PCH VCCPRIM_1P0 BYPASS
(PCH 1.0V USB PWR)
PP1V_PRIM
C1336 0.1UF 10% 6.3V X6S 0201
BYPASS=U0500.AH13::1.39mm

PCH VCCSPI BYPASS
(PCH 3.3V/1.8V SPI PWR)
PP1V8_S5
C1302 0.1UF 10% 6.3V X6S 0201
BYPASS=U0500.AT15::2.38mm

PCH VCCMPHYAON_1P0 BYPASS
(PCH 1.0V MPHY ALWAYS ON PWR)
PP1V_PRIM
C1340 0.1UF 10% 6.3V X6S 0201
BYPASS=U0500.V1::1.68mm

PCH VCCRTCPRIM BYPASS
(PCH 3.3V SUSPEND RTC PWR)
PP3V3_S5
C1306 1.0UF 20% 6.3V X5R 0201-1
BYPASS=U0500.AK19::1.68mm
C1307 0.1UF 10% 6.3V X6S 0201
BYPASS=U0500.AK19::1.68mm

PCH VCCAPLLEBB BYPASS
(PCH 1.0V APLL EBB PWR)
PP1V_PRIM
C1344 0.1UF 10% 6.3V X6S 0201
BYPASS=U0500.R15::1.54mm

PCH VCCPGPPE BYPASS
(PCH 3.3V/1.8V GPIO GROUP E PWR)
PP3V3_S5
C1318 0.1UF 10% 6.3V X6S 0201
BYPASS=U0500.AA2::0.84mm

PCH VCCMPHYGT_1P0 BYPASS
(PCH 1.0V MPHY GATED PWR)
PP1V_PRIM
C1346 0.1UF 10% 6.3V X6S 0201
BYPASS=U0500.T15::3.07mm
C1347 1.0UF 20% 6.3V X5R 0201-1
BYPASS=U0500.T15::4.18mm
C1348 20UF 20% 6.3V CERM-X5R 0402
BYPASS=U0500.T15::4.18mm

PCH VCCATS BYPASS
(PCH 1.8V THERMAL PWR)
PP1V8_S5
C1330 1.0UF 20% 6.3V X5R 0201-1
BYPASS=U0500.AE15::1.76mm

PCH VCCAMPHYPLL_1P0 FILTER/BYPASS
(PCH 1.0V USB3/PCIE/SATA/MIPI PLL PWR)
PP1V_SUSSW_PCH_VCCAMPHYPLL
MIN_LINE_WIDTH=0.2000
MIN_NECK_WIDTH=0.1000
VOLTAGE=1.0V
PP1V_PRIM
R1370 0 5% 1/16W MF-LF 402
NOSTUFF C1370 20UF 20% 6.3V CERM-X5R 0402
NOSTUFF C1371 20UF 20% 6.3V CERM-X5R 0402
NOSTUFF C1372 0.1UF 10% 6.3V X6S 0201
BYPASS=U0500.V15::12.82mm
BYPASS=U0500.V15::12.82mm
BYPASS=U0500.V15::3.91mm

PCH VCCCLK3 FILTER/BYPASS
(PCH 1.0V CLOCK 3 PWR)
PP1V_SUS_PCH_VCCCLK3
MIN_LINE_WIDTH=0.0950
MIN_NECK_WIDTH=0.0700
VOLTAGE=1.0V
PP1V_PRIM
R1380 0 5% 1/16W MF-LF 402
NOSTUFF C1380 20UF 20% 6.3V CERM-X5R 0402
NOSTUFF C1381 20UF 20% 6.3V CERM-X5R 0402
BYPASS=U0500.V19::10.17mm
BYPASS=U0500.V19::10.17mm

PCH VCCCLK4 FILTER/BYPASS
(PCH 1.0V CLOCK 4 PWR)
PP1V_SUS_PCH_VCCCLK4
MIN_LINE_WIDTH=0.2000
MIN_NECK_WIDTH=0.1000
VOLTAGE=1.0V
PP1V_PRIM
R1385 0 5% 1/16W MF-LF 402
NOSTUFF C1385 20UF 20% 6.3V CERM-X5R 0402
NOSTUFF C1386 20UF 20% 6.3V CERM-X5R 0402
BYPASS=U0500.V21::10.17mm
BYPASS=U0500.V21::10.17mm

PCH VCCCLK5 FILTER/BYPASS
(PCH 1.0V CLOCK 5 PWR)
PP1V_SUS_PCH_VCCCLK5
MIN_LINE_WIDTH=0.2000
MIN_NECK_WIDTH=0.1000
VOLTAGE=1.0V
PP1V_PRIM
R1390 0 5% 1/16W MF-LF 402
NOSTUFF C1390 20UF 20% 6.3V CERM-X5R 0402
NOSTUFF C1391 20UF 20% 6.3V CERM-X5R 0402
C1392 0.1UF 10% 6.3V X6S 0201
BYPASS=U0500.R21::10.17mm
BYPASS=U0500.R21::10.17mm
BYPASS=U0500.R21::0.92mm

PCH VCCHDA FILTER/BYPASS
(PCH 3.3V/1.8V/1.5V HDA PWR)
PP3V3R1V8R1V5_S0_PCH_VCCHDA
MIN_LINE_WIDTH=0.0950
MIN_NECK_WIDTH=0.0700
VOLTAGE=1.5V
OMIT_TABLE
PP1V8_S5
L1309 220-OHM-0.7A-0.28-OHM 0402-1
PLACE_NEAR=U0500.AT23:1mm
PLACE_NEAR=L1309.1:1mm
C1308 3.0PF +/-0.1PF 25V NPO-C0G 0201
NOSTUFF C1304 0.1UF 10% 6.3V X6S 0201
C1309 2.9PF +/-0.05PF 25V C0G-CERM 0201
BYPASS=U0500.AT23::1.23mm
BYPASS=U0500.AT23::1.23mm

PCH VCCAPLL FILTER/BYPASS
(PCH 1.0V APLL PWR)
PP1V_SUS_PCH_VCCAPLL
MIN_LINE_WIDTH=0.0950
MIN_NECK_WIDTH=0.0700
VOLTAGE=1.0V
OMIT_TABLE
PP1V_PRIM
L1395 220-OHM-0.7A-0.28-OHM 0402-1
PLACE_NEAR=U0500.AA18:1mm
PLACE_NEAR=L1395.1:1mm
C1393 3.0PF +/-0.1PF 25V NPO-C0G 0201
NOSTUFF C1394 0.1UF 10% 6.3V X6S 0201
C1395 3.0PF +/-0.1PF 25V NPO-C0G 0201
BYPASS=U0500.AA18::1.23mm
BYPASS=U0500.AA18::1.23mm

PART#	QTY	DESCRIPTION	REFERENCE DESIGNATOR(S)	BOM OPTION
155S0391	2	FERR BD,220 OHM,25%,700MA,0.28 DCR,0402	L1309,L1395	PCHFLTR:FERRITE
116S0004	2	RES,MTL FILM,0 OHM,1A MAX,0402,SMD	L1309,L1395	PCHFLTR:BYPASS
155S00480	2	FERR BD,30 OHMZ,25%,0.6A,0.449 OHM,0402	L1309,L1395	PCHFLTR:FERRITE30

BOM_COST_GROUP=CPU & CHIPSET

VINAFIX.COM

苹果最新图纸

SYNC_MASTER=J122_MLB SYNC_DATE=03/30/2018

PAGE TITLE
PCH Decoupling

Apple Inc.

DRAWING NUMBER 051-04039 SIZE D
REVISION 2.0.0
BRANCH
PAGE 13 OF 145
SHEET 13 OF 85

NOTICE OF PROPRIETARY PROPERTY:
THE INFORMATION CONTAINED HEREIN IS THE PROPRIETARY PROPERTY OF APPLE INC.
THE POSESSOR AGREES TO THE FOLLOWING:
I TO MAINTAIN THIS DOCUMENT IN CONFIDENCE
II NOT TO REPRODUCE OR COPY IT
III NOT TO REVEAL OR PUBLISH IT IN WHOLE OR PART
IV ALL RIGHTS RESERVED

CRITICAL
OMIT_TABLE

U0500
KBL-PCH-Y-QKKR
BGA
947915
SYM 7 OF 20

TP_HDA_SYNC	BJ19	HDA_SYNC/I2S0_SFRM (IPD-PLTRST#)	
TP_HDA_BIT_CLK	BK18	HDA_BLK/I2S0_SCLK	
20 IN HDA_SDOUT	BK16	HDA_SDO/I2S0_TXD (IPD-PLTRST#)	
TP_HDA_SDIN0	BL15	HDA_SDI0/I2S0_RXD (IPD)	
TP_HDA_SDIN1	BL17	HDA_SDI1/I2S1_RXD	
TP_HDA_RST_L	BL19	HDA_RST*/I2S1_SCLK	
18 OUT SPT_XDP_PCH_OBSDATA_D0	V5	GPP_D23/I2S_MCLK	
TP_PCH_I2S1_SFRM	BL12	I2S1_SFRM (IPD)	AUDIO
TP_PCH_I2S1_TXD	BK14	I2S1_TXD	
TP_PCH_GPP_F1	AT13	GPP_F1/I2S2_SFRM	
TP_PCH_GPP_F0	AT11	GPP_F0/I2S2_SCLK	
TP_PCH_GPP_F2	AP11	GPP_F2/I2S2_TXD	
TP_PCH_GPP_F3	AT5	GPP_F3/I2S2_RXD	
18 OUT SPT_XDP_PCH_OBSDATA_C2	V3	GPP_D19/DMIC_CLK0	
18 OUT SPT_XDP_PCH_OBSDATA_C3	V11	GPP_D20/DMIC_DATA0	
18 OUT SPT_XDP_PCH_OBSDATA_C0	U12	GPP_D17/DMIC_CLK1	
18 OUT SPT_XDP_PCH_OBSDATA_C1	U8	GPP_D18/DMIC_DATA1	
77 NC_PCH_STRP_TOPBLK_SWP_L	AV3	GPP_B14/SPKR (IPD-PLTRST#)	

GPP_G0/SD_CMD	AH9	TBT_X_CIO_PWR_EN	OUT 14 25 27 28
GPP_G1/SD_DATA0	AH11	TBT_X_USB_PWR_EN	OUT 14 25 27 28 29
GPP_G2/SD_DATA1	AG12	TBT_POC_RESET	OUT 14 27
GPP_G3/SD_DATA2	AF9	JTAG_TBT_X_TMS	OUT 14 25 27
GPP_G4/SD_DATA3	AF11	TBT_X_PCI_RESET_L	OUT 25 27
GPP_G5/SD_CD*	AG8	JTAG_ISP_TCK	OUT 14 25
GPP_G6/SD_CLK	AG10	JTAG_ISP_TDI	OUT 14 25
GPP_G7/SD_WP	AE12	JTAG_ISP_TDO	OUT 14 25
GPP_A17/SD_PWR_EN*/ISH_GP7	BL4	TP_PCH_GPP_A17	
GPP_A16/SD_1P8_SEL	BN4	TP_PCH_GPP_A16	
SD_RCOMP	BF1	TP_PCH_SD_RCOMP	
GPP_F23	AJ8	TP_PCH_GPP_F23	
SDIO/SDXC			

PLT_RST_3V3_L IN 20

R1424 100K 5% 1/20W MF 201

CKPLUS_WAIVE=CLK_DATA_CON
U0500.V5, U0500.V3, U0500.U12

CRITICAL
OMIT_TABLE

U0500
KBL-PCH-Y-QKKR
BGA
947915
SYM 5 OF 20

77 OUT NC_SPI_PCHROM_CLK	AU10	SPI0_CLK (IPD-RSMRST#)	SPI - FLASH
77 BI NC_SPI_PCHROM_MISO	AU12	SPI0_MISO (IPU)	
77 BI NC_SPI_PCHROM_MOSI	AT3	SPI0_MOSI (IPD-RSMRST#)	
77 BI NC_SPI_PCHROM_IO<2>	AV11	SPI0_IO2 (IPU)	
20 BI SPI_PCHROM_IO<3>	AV13	SPI0_IO3 (IPU)	
77 OUT NC_SPI_PCHROM_CS_L	AU4	SPI0_CS0* (IPD-RSMRST#)	
TP_SPI_CS1_L	AU6	SPI0_CS1* (IPD-RSMRST#)	
TP_SPI_CS2_L	AU8	SPI0_CS2* (IPD-RSMRST#)	
TP_PCH_GPP_D1	P9	GPP_D1	
TP_PCH_GPP_D2	N8	GPP_D2	
TP_PCH_GPP_D3	P3	GPP_D3	
17 IN MLB_RAMCFG4	W12	GPP_D21	
TP_PCH_GPP_D22	V7	GPP_D22	
TP_PCH_GPP_D0	N6	GPP_D0	
TP_CLINK_CLK	F12	CL_CLK (IPU/IPD)	C LINK
TP_CLINK_DATA	D12	CL_DATA (IPU/IPD)	
TP_CLINK_RESET_L	B12	CL_RST*	
14 PCH_GPP_A0_PU	BL10	GPP_A0/RCIN* (IPU-eSPI)	
TP_PCH_GPP_A6	BN8	GPP_A6/SERIRQ (IPU-eSPI)	

GPP_C0/SMBCLK	AC12	SMBUS_PCH_CLK	OUT 45
GPP_C1/SMBDATA	W6	SMBUS_PCH_DATA	BI 45
GPP_C2/SMBALERT* (IPD-RSMRST#)	W8	TP_PCH_STRP_TLSCONF	
GPP_C3/SML0CLK	W4	SML_PCH_0_CLK	OUT 45
GPP_C4/SML0DATA	AC10	SML_PCH_0_DATA	BI 45
GPP_C5/SML0ALERT* (IPD-RSMRST#)	AA6	PCH_STRP_ESPI	14
GPP_C6/SML1CLK	AA4	I2C_SNS1_S0_SCL	OUT 45
GPP_C7/SML1DATA	W10	I2C_SNS1_S0_SDA	BI 45
GPP_B23/SML1ALERT*/PCHHOT* (IPD-PLTRST#)	BB6	TP_PCH_STRP_BSSB_SEL_GPIO	
GPP_A1/LAD0/ESPI_IO0	BK11	ESPI_IO<0>	BI 35
GPP_A2/LAD1/ESPI_IO1	BJ8	ESPI_IO<1>	BI 35
GPP_A3/LAD2/ESPI_IO2 (IPU)	BG10	ESPI_IO<2>	BI 35
GPP_A4/LAD3/ESPI_IO3	BP5	ESPI_IO<3>	BI 35
GPP_A5/LFRAME*/ESPI_CS* (IPU-eSPI)	BP7	ESPI_CS_L	OUT 35
GPP_A14/SUS_STAT*/ESPI_RESET*	BJ6	ESPI_RESET_L	OUT 35
GPP_A9/CLKOUT_LPC0/ESPI_CLK	BJ10	ESPI_CLK60M_R	
GPP_A10/CLKOUT_LPC1	BF5	TP_PCH_GPP_A10	
GPP_A8/CLKRUN*	BH11	TP_PCH_GPP_A8	

R1476 22 1% 1/20W MF 201 ESPI_CLK60M OUT 35

LPC strap sampled at RSMRST# rising (0 = LPC, 1 = eSPI)

PP1V8_S5 9 17 75
PP3V3_S5 9 75
PM_SLP_S3_L 5 15 20 25 79

R1420	100K	TBT_X_CIO_PWR_EN	14 25 27 28 29
R1421	100K	TBT_X_USB_PWR_EN	14 25 27 28 29
R1422	10K	JTAG_TBT_X_TMS	14 25 27
R1423	10K	JTAG_ISP_TDO	14 25
R1468	100K	PCH_GPP_A0_PU	14
R1475	1K	PCH_STRP_ESPI	14
R1425	100K	TBT_POC_RESET	14 27
R1426	100K	JTAG_ISP_TCK	14 25
R1427	100K	JTAG_ISP_TDI	14 25

5% 1/20W MF 201

苹果最新图纸

BOM_COST_GROUP=CPU & CHIPSET

SYNC_MASTER=J122_MLB SYNC_DATE=03/30/2018

PAGE TITLE
PCH Audio/LPC/SPI/SMBus

Apple Inc.

DRAWING NUMBER 051-04039 SIZE D
REVISION 2.0.0
BRANCH
PAGE 14 OF 145
SHEET 14 OF 85

NOTICE OF PROPRIETARY PROPERTY:
THE INFORMATION CONTAINED HEREIN IS THE PROPRIETARY PROPERTY OF APPLE INC.
THE POSESSOR AGREES TO THE FOLLOWING:
I TO MAINTAIN THIS DOCUMENT IN CONFIDENCE
II NOT TO REPRODUCE OR COPY IT
III NOT TO REVEAL OR PUBLISH IT IN WHOLE OR PART
IV ALL RIGHTS RESERVED

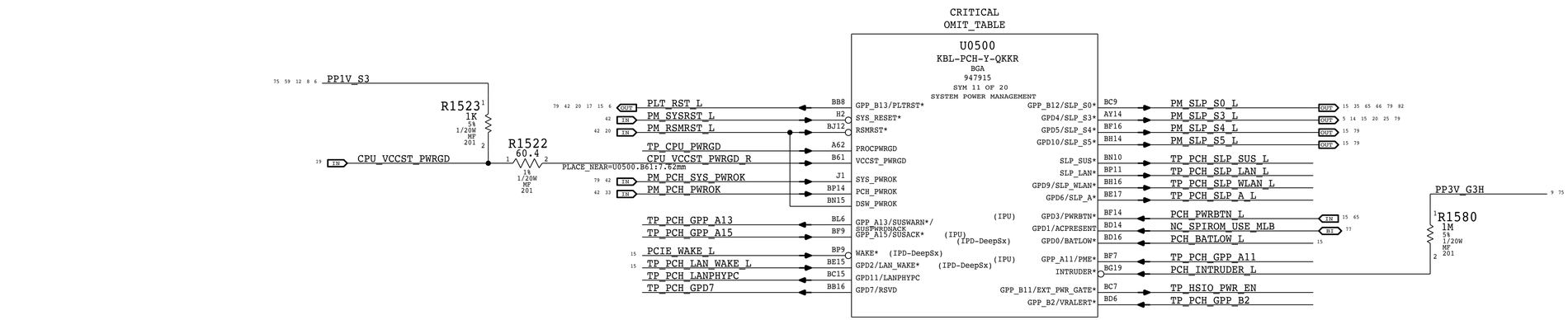

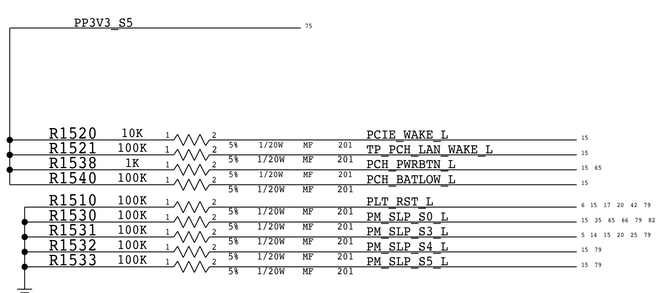

VINAFIX.COM

苹果最新图纸

BOM_COST_GROUP=CPU & CHIPSET

SYNC_MASTER=J122_MLB SYNC_DATE=03/30/2018

PAGE TITLE
PCH Power Management

Apple Inc.

DRAWING NUMBER 051-04039 SIZE D
REVISION 2.0.0
BRANCH
PAGE 15 OF 145
SHEET 15 OF 85

NOTICE OF PROPRIETARY PROPERTY:
THE INFORMATION CONTAINED HEREIN IS THE PROPRIETARY PROPERTY OF APPLE INC.
THE POSESSOR AGREES TO THE FOLLOWING:
I TO MAINTAIN THIS DOCUMENT IN CONFIDENCE
II NOT TO REPRODUCE OR COPY IT
III NOT TO REVEAL OR PUBLISH IT IN WHOLE OR PART
IV ALL RIGHTS RESERVED

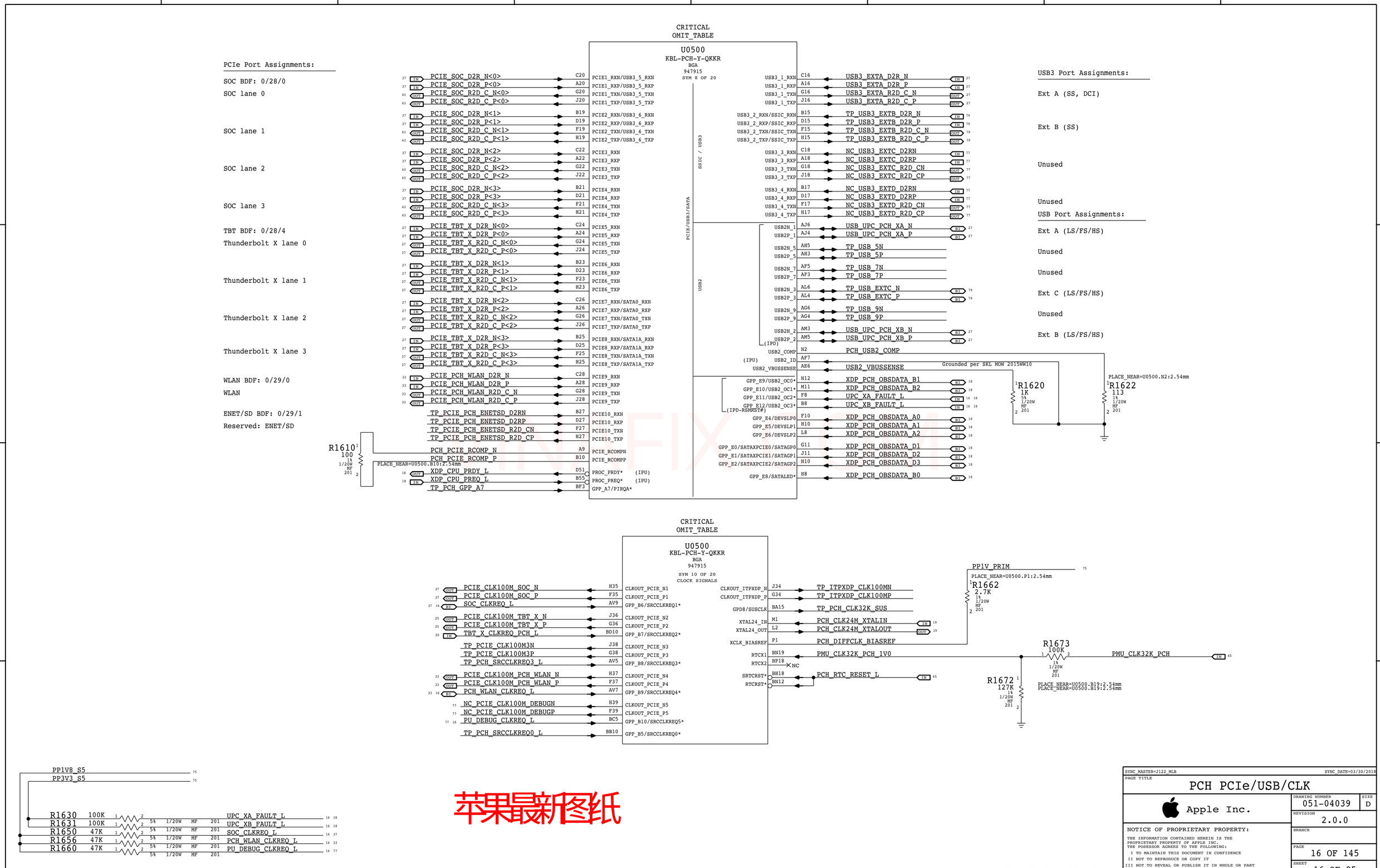
CRITICAL
OMIT_TABLE
U0500
KBL-PCH-Y-QKKR
BGA
947915
SYM 8 OF 20
PCIe Port Assignments:
SOC BDF: 0/28/0
SOC lane 0
SOC lane 1
SOC lane 2
SOC lane 3
TBT BDF: 0/28/4
Thunderbolt X lane 0
Thunderbolt X lane 1
Thunderbolt X lane 2
Thunderbolt X lane 3
WLAN BDF: 0/29/0
WLAN
ENET/SD BDF: 0/29/1
Reserved: ENET/SD
PCIE_SOC_D2R_N<0>
PCIE_SOC_D2R_P<0>
PCIE_SOC_R2D_C_N<0>
PCIE_SOC_R2D_C_P<0>
PCIE_SOC_D2R_N<1>
PCIE_SOC_D2R_P<1>
PCIE_SOC_R2D_C_N<1>
PCIE_SOC_R2D_C_P<1>
PCIE_SOC_D2R_N<2>
PCIE_SOC_D2R_P<2>
PCIE_SOC_R2D_C_N<2>
PCIE_SOC_R2D_C_P<2>
PCIE_SOC_D2R_N<3>
PCIE_SOC_D2R_P<3>
PCIE_SOC_R2D_C_N<3>
PCIE_SOC_R2D_C_P<3>
PCIE_TBT_X_D2R_N<0>
PCIE_TBT_X_D2R_P<0>
PCIE_TBT_X_R2D_C_N<0>
PCIE_TBT_X_R2D_C_P<0>
PCIE_TBT_X_D2R_N<1>
PCIE_TBT_X_D2R_P<1>
PCIE_TBT_X_R2D_C_N<1>
PCIE_TBT_X_R2D_C_P<1>
PCIE_TBT_X_D2R_N<2>
PCIE_TBT_X_D2R_P<2>
PCIE_TBT_X_R2D_C_N<2>
PCIE_TBT_X_R2D_C_P<2>
PCIE_TBT_X_D2R_N<3>
PCIE_TBT_X_D2R_P<3>
PCIE_TBT_X_R2D_C_N<3>
PCIE_TBT_X_R2D_C_P<3>
PCIE_PCH_WLAN_D2R_N
PCIE_PCH_WLAN_D2R_P
PCIE_PCH_WLAN_R2D_C_N
PCIE_PCH_WLAN_R2D_C_P
TP_PCIE_PCH_ENETSD_D2RN
TP_PCIE_PCH_ENETSD_D2RP
TP_PCIE_PCH_ENETSD_R2D_CN
TP_PCIE_PCH_ENETSD_R2D_CP
PCH_PCIE_RCOMP_N
PCH_PCIE_RCOMP_P
R1610
100
1%
1/20W
MF
201
PLACE_NEAR=U0500.B10:2.54mm
XDP_CPU_PRDY_L
XDP_CPU_PREQ_L
TP_PCH_GPP_A7
PCIE1_RXN/USB3_5_RXN
PCIE1_RXP/USB3_5_RXP
PCIE1_TXN/USB3_5_TXN
PCIE1_TXP/USB3_5_TXP
PCIE2_RXN/USB3_6_RXN
PCIE2_RXP/USB3_6_RXP
PCIE2_TXN/USB3_6_TXN
PCIE2_TXP/USB3_6_TXP
PCIE3_RXN
PCIE3_RXP
PCIE3_TXN
PCIE3_TXP
PCIE4_RXN
PCIE4_RXP
PCIE4_TXN
PCIE4_TXP
PCIE5_RXN
PCIE5_RXP
PCIE5_TXN
PCIE5_TXP
PCIE6_RXN
PCIE6_RXP
PCIE6_TXN
PCIE6_TXP
PCIE7_RXN/SATA0_RXN
PCIE7_RXP/SATA0_RXP
PCIE7_TXN/SATA0_TXN
PCIE7_TXP/SATA0_TXP
PCIE8_RXN/SATA1A_RXN
PCIE8_RXP/SATA1A_RXP
PCIE8_TXN/SATA1A_TXN
PCIE8_TXP/SATA1A_TXP
PCIE9_RXN
PCIE9_RXP
PCIE9_TXN
PCIE9_TXP
PCIE10_RXN
PCIE10_RXP
PCIE10_TXN
PCIE10_TXP
PCIE_RCOMPN
PCIE_RCOMPP
PROC_PRDY* (IPU)
PROC_PREQ* (IPU)
GPP_A7/PIRQA*
PCIE/USB3/SATA
SSIC / USB3
USB2
USB3_1_RXN
USB3_1_RXP
USB3_1_TXN
USB3_1_TXP
USB3_2_RXN/SSIC_RXN
USB3_2_RXP/SSIC_RXP
USB3_2_TXN/SSIC_TXN
USB3_2_TXP/SSIC_TXP
USB3_3_RXN
USB3_3_RXP
USB3_3_TXN
USB3_3_TXP
USB3_4_RXN
USB3_4_RXP
USB3_4_TXN
USB3_4_TXP
USB3_EXTA_D2R_N
USB3_EXTA_D2R_P
USB3_EXTA_R2D_C_N
USB3_EXTA_R2D_C_P
TP_USB3_EXTB_D2R_N
TP_USB3_EXTB_D2R_P
TP_USB3_EXTB_R2D_C_N
TP_USB3_EXTB_R2D_C_P
NC_USB3_EXTC_D2RN
NC_USB3_EXTC_D2RP
NC_USB3_EXTC_R2D_CN
NC_USB3_EXTC_R2D_CP
NC_USB3_EXTD_D2RN
NC_USB3_EXTD_D2RP
NC_USB3_EXTD_R2D_CN
NC_USB3_EXTD_R2D_CP
USB3 Port Assignments:
Ext A (SS, DCI)
Ext B (SS)
Unused
Unused
USB Port Assignments:
Ext A (LS/FS/HS)
Unused
Unused
Ext C (LS/FS/HS)
Unused
Ext B (LS/FS/HS)
USB2N_1
USB2P_1
USB2N_5
USB2P_5
USB2N_7
USB2P_7
USB2N_3
USB2P_3
USB2N_9
USB2P_9
USB2N_2
USB2P_2
(IPD)
USB_UPC_PCH_XA_N
USB_UPC_PCH_XA_P
TP_USB_5N
TP_USB_5P
TP_USB_7N
TP_USB_7P
TP_USB_EXTC_N
TP_USB_EXTC_P
TP_USB_9N
TP_USB_9P
USB_UPC_PCH_XB_N
USB_UPC_PCH_XB_P
USB2_COMP
USB2_ID
USB2_VBUSSENSE
(IPU)
PCH_USB2_COMP
Grounded per SKL MOW 2015WW10
R1620
1K
5%
1/20W
MF
201
PLACE_NEAR=U0500.N2:2.54mm
R1622
113
1%
1/20W
MF
201
GPP_E9/USB2_OC0*
GPP_E10/USB2_OC1*
GPP_E11/USB2_OC2*
GPP_E12/USB2_OC3*
(IPD-RSMRST#)
XDP_PCH_OBSDATA_B1
XDP_PCH_OBSDATA_B2
UPC_XA_FAULT_L
UPC_XB_FAULT_L
GPP_E4/DEVSLP0
GPP_E5/DEVSLP1
GPP_E6/DEVSLP2
XDP_PCH_OBSDATA_A0
XDP_PCH_OBSDATA_A1
XDP_PCH_OBSDATA_A2
GPP_E0/SATAXPCIE0/SATAGP0
GPP_E1/SATAXPCIE1/SATAGP1
GPP_E2/SATAXPCIE2/SATAGP2
XDP_PCH_OBSDATA_D1
XDP_PCH_OBSDATA_D2
XDP_PCH_OBSDATA_D3
GPP_E8/SATALED*
XDP_PCH_OBSDATA_B0
CRITICAL
OMIT_TABLE
U0500
KBL-PCH-Y-QKKR
BGA
947915
SYM 10 OF 20
CLOCK SIGNALS
PCIE_CLK100M_SOC_N
PCIE_CLK100M_SOC_P
SOC_CLKREQ_L
PCIE_CLK100M_TBT_X_N
PCIE_CLK100M_TBT_X_P
TBT_X_CLKREQ_PCH_L
TP_PCIE_CLK100M3N
TP_PCIE_CLK100M3P
TP_PCH_SRCCLKREQ3_L
PCIE_CLK100M_PCH_WLAN_N
PCIE_CLK100M_PCH_WLAN_P
PCH_WLAN_CLKREQ_L
NC_PCIE_CLK100M_DEBUGN
NC_PCIE_CLK100M_DEBUGP
PU_DEBUG_CLKREQ_L
TP_PCH_SRCCLKREQ0_L
CLKOUT_PCIE_N1
CLKOUT_PCIE_P1
GPP_B6/SRCCLKREQ1*
CLKOUT_PCIE_N2
CLKOUT_PCIE_P2
GPP_B7/SRCCLKREQ2*
CLKOUT_PCIE_N3
CLKOUT_PCIE_P3
GPP_B8/SRCCLKREQ3*
CLKOUT_PCIE_N4
CLKOUT_PCIE_P4
GPP_B9/SRCCLKREQ4*
CLKOUT_PCIE_N5
CLKOUT_PCIE_P5
GPP_B10/SRCCLKREQ5*
GPP_B5/SRCCLKREQ0*
CLKOUT_ITPXDP_N
CLKOUT_ITPXDP_P
GPD8/SUSCLK
XTAL24_IN
XTAL24_OUT
XCLK_BIASREF
RTCX1
RTCX2
SRTCRST*
RTCRST*
TP_ITPXDP_CLK100MN
TP_ITPXDP_CLK100MP
TP_PCH_CLK32K_SUS
PCH_CLK24M_XTALIN
PCH_CLK24M_XTALOUT
PCH_DIFFCLK_BIASREF
PMU_CLK32K_PCH_1V0
PCH_RTC_RESET_L
NC
PP1V_PRIM
PLACE_NEAR=U0500.P1:2.54mm
R1662
2.7K
1%
1/20W
MF
201
R1673
100K
1%
1/20W
MF
201
PMU_CLK32K_PCH
R1672
127K
1%
1/20W
MF
201
PLACE_NEAR=U0500.B19:2.54mm
PLACE_NEAR=U0500.B19:2.54mm
PP1V8_S5
PP3V3_S5
R1630 100K 5% 1/20W MF 201 UPC_XA_FAULT_L
R1631 100K 5% 1/20W MF 201 UPC_XB_FAULT_L
R1650 47K 5% 1/20W MF 201 SOC_CLKREQ_L
R1656 47K 5% 1/20W MF 201 PCH_WLAN_CLKREQ_L
R1660 47K 5% 1/20W MF 201 PU_DEBUG_CLKREQ_L
苹果最新图纸
BOM_COST_GROUP=CPU & CHIPSET
SYNC_MASTER=J122_MLB
SYNC_DATE=03/30/2018
PAGE TITLE
PCH PCIe/USB/CLK
Apple Inc.
DRAWING NUMBER
051-04039
SIZE
D
REVISION
2.0.0
NOTICE OF PROPRIETARY PROPERTY:
THE INFORMATION CONTAINED HEREIN IS THE PROPRIETARY PROPERTY OF APPLE INC.
THE POSESSOR AGREES TO THE FOLLOWING:
I TO MAINTAIN THIS DOCUMENT IN CONFIDENCE
II NOT TO REPRODUCE OR COPY IT
III NOT TO REVEAL OR PUBLISH IT IN WHOLE OR PART
IV ALL RIGHTS RESERVED
BRANCH
PAGE
16 OF 145
SHEET
16 OF 85

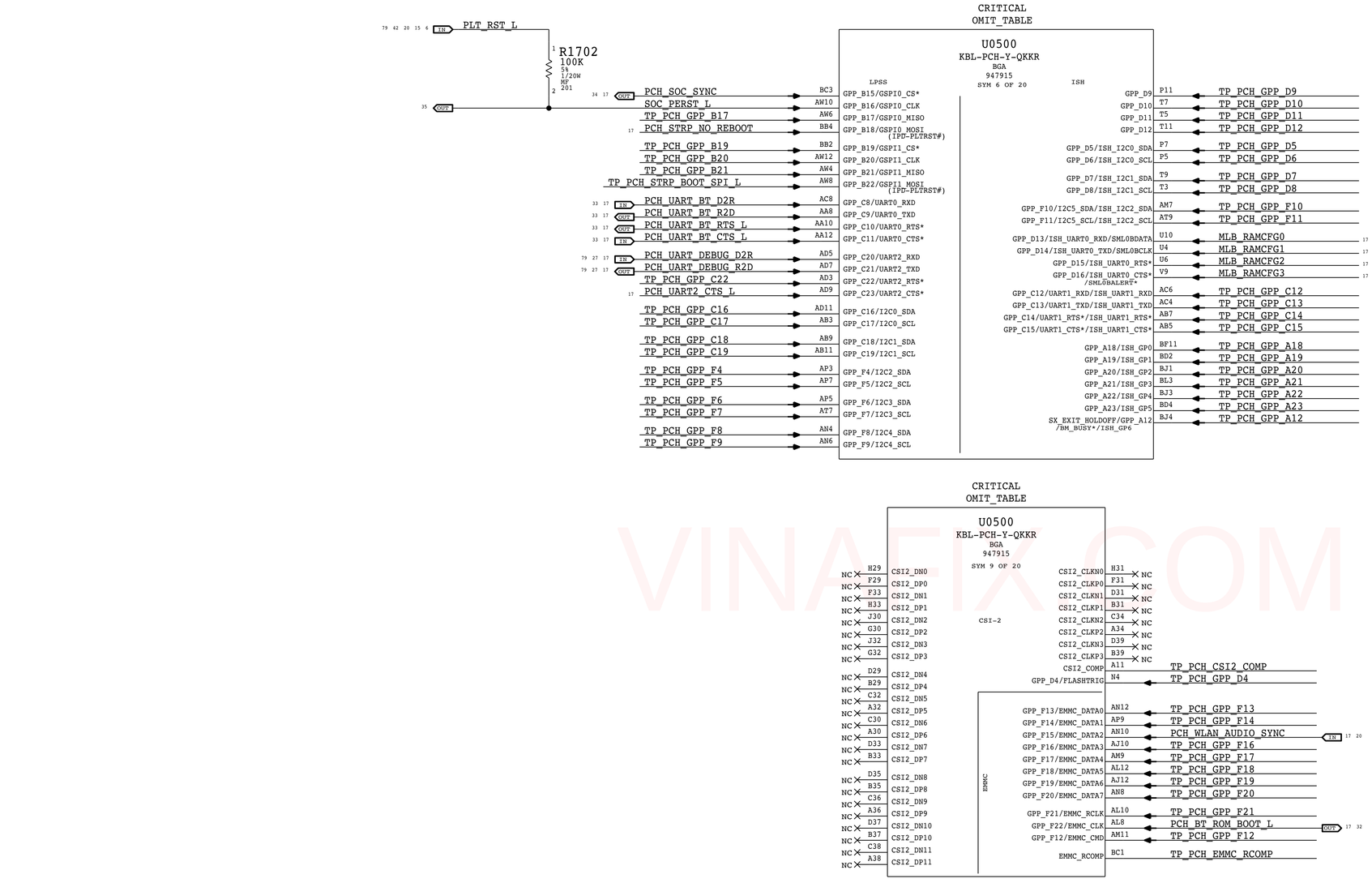

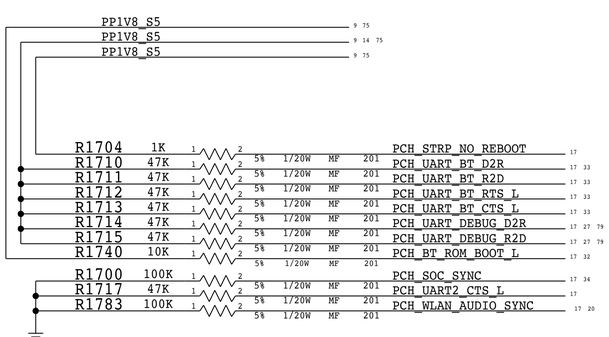

RAM Configuration Straps

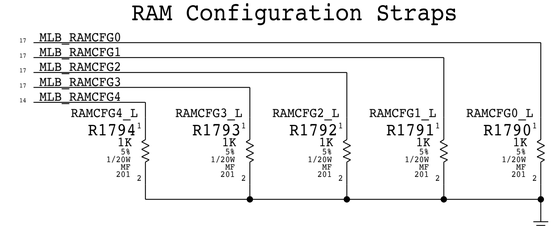

苹果最新图纸

BOM_COST_GROUP=CPU & CHIPSET

SYNC_MASTER=J122_MLB SYNC_DATE=03/30/2018

PAGE TITLE: PCH GPIO/LPSS

Apple Inc.

DRAWING NUMBER: 051-04039 SIZE: D

REVISION: 2.0.0

BRANCH

PAGE: 17 OF 145

SHEET: 17 OF 85

NOTICE OF PROPRIETARY PROPERTY:
THE INFORMATION CONTAINED HEREIN IS THE PROPRIETARY PROPERTY OF APPLE INC. THE POSSESSOR AGREES TO THE FOLLOWING:
I TO MAINTAIN THIS DOCUMENT IN CONFIDENCE
II NOT TO REPRODUCE OR COPY IT
III NOT TO REVEAL OR PUBLISH IT IN WHOLE OR PART
IV ALL RIGHTS RESERVED

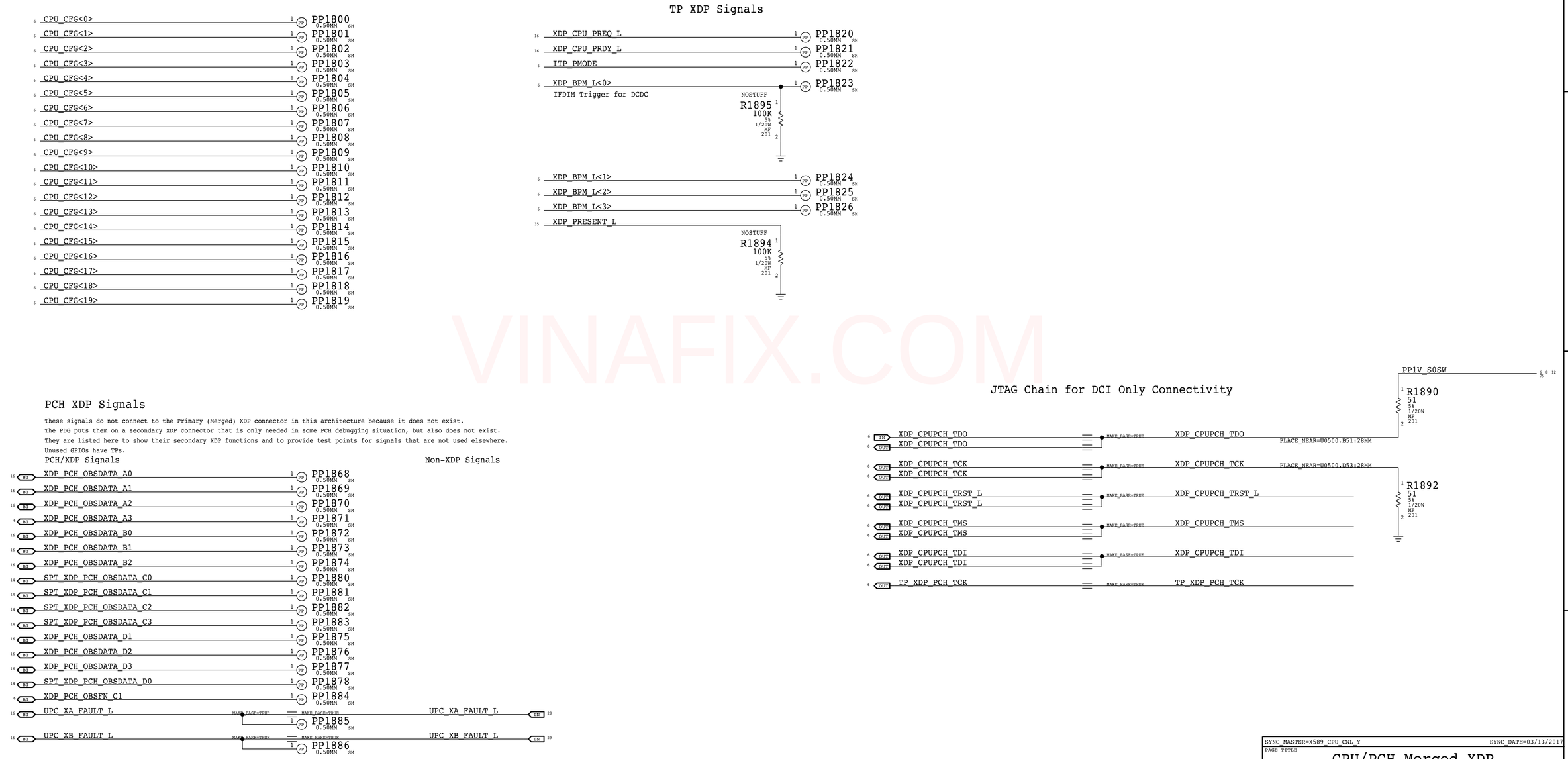

VINAFIX.COM

苹果最新图纸

BOM_COST_GROUP=DEBUG

SYNC_MASTER=X589_CPU_CNL_Y SYNC_DATE=03/13/2017

PAGE TITLE
CPU/PCH Merged XDP

Apple Inc.

DRAWING NUMBER 051-04039 SIZE D

REVISION 2.0.0

BRANCH

PAGE 18 OF 145

SHEET 18 OF 85

NOTICE OF PROPRIETARY PROPERTY:
THE INFORMATION CONTAINED HEREIN IS THE PROPRIETARY PROPERTY OF APPLE INC.
THE POSESSOR AGREES TO THE FOLLOWING:
I TO MAINTAIN THIS DOCUMENT IN CONFIDENCE
II NOT TO REPRODUCE OR COPY IT
III NOT TO REVEAL OR PUBLISH IT IN WHOLE OR PART
IV ALL RIGHTS RESERVED

24MHz Crystal

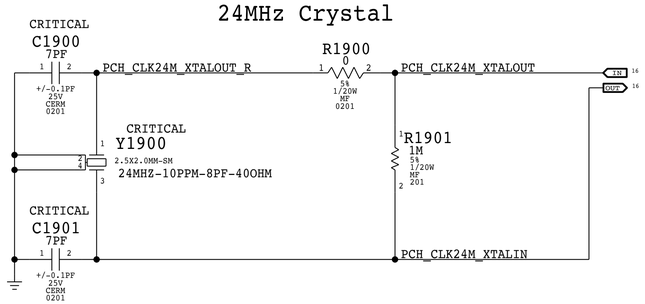

VCCST_PWRGD Generation

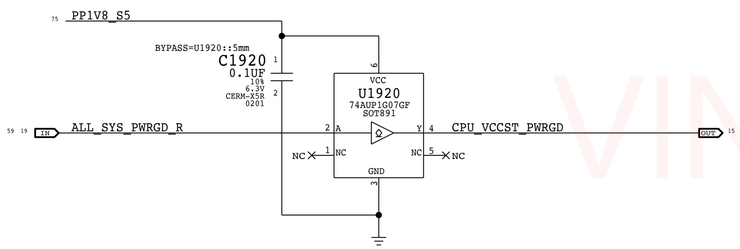

ALL_SYS_PWRGD Qualifier

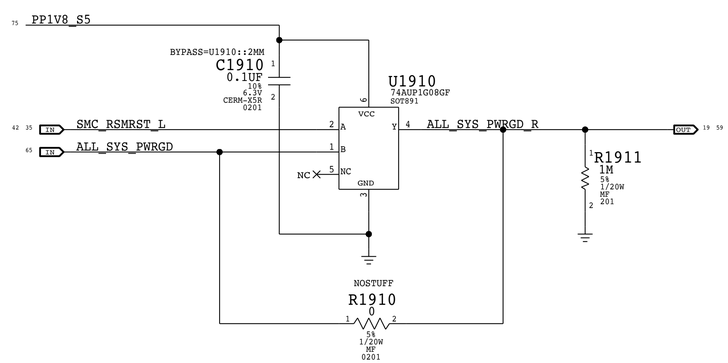

VINAFIX.COM

苹果最新图纸

BOM_COST_GROUP=CPU & CHIPSET

SYNC_MASTER=X589_CPU_CNL_Y SYNC_DATE=03/27/2017

PAGE TITLE
Chipset Shared Support

Apple Inc.

DRAWING NUMBER 051-04039 SIZE D

REVISION 2.0.0

BRANCH

PAGE 19 OF 145

SHEET 19 OF 85

NOTICE OF PROPRIETARY PROPERTY:
THE INFORMATION CONTAINED HEREIN IS THE PROPRIETARY PROPERTY OF APPLE INC.
THE POSESSOR AGREES TO THE FOLLOWING:
I TO MAINTAIN THIS DOCUMENT IN CONFIDENCE
II NOT TO REPRODUCE OR COPY IT
III NOT TO REVEAL OR PUBLISH IT IN WHOLE OR PART
IV ALL RIGHTS RESERVED

PLTRST# 3.3V Level Shifter

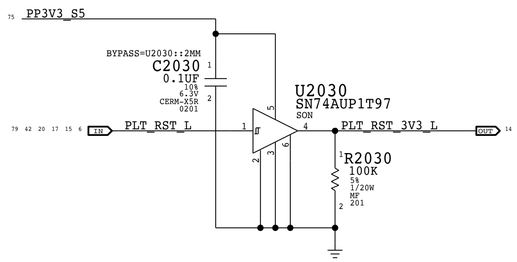

DP DDP Straps

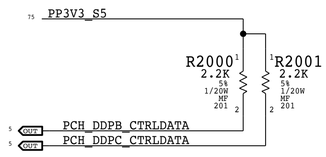

TBT X CLKREQ Level Shifter

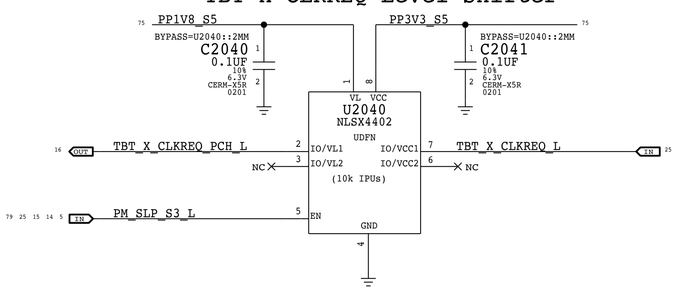

SAF Selector

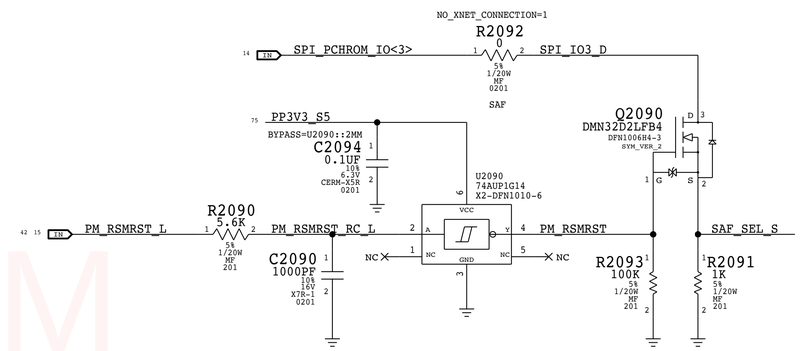

WLAN_AUDIO_SYNC Isolation

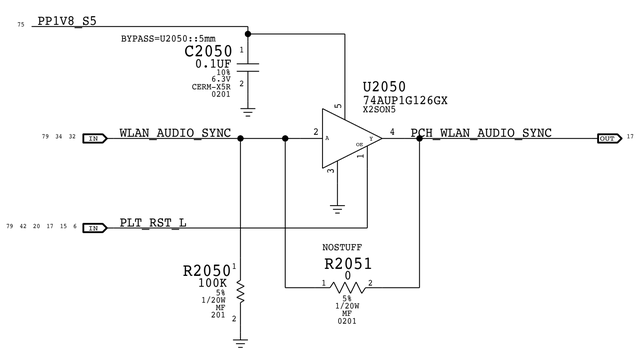

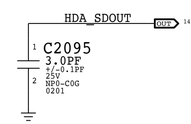

VINAFIX.COM

苹果最新图纸

BOM_COST_GROUP=CPU & CHIPSET

SYNC_MASTER=X589_CPU_CNL_Y SYNC_DATE=03/07/2017

PAGE TITLE
Chipset Project Support

Apple Inc.

DRAWING NUMBER 051-04039 SIZE D
REVISION 2.0.0
BRANCH
PAGE 20 OF 145
SHEET 20 OF 85

NOTICE OF PROPRIETARY PROPERTY:
THE INFORMATION CONTAINED HEREIN IS THE PROPRIETARY PROPERTY OF APPLE INC. THE POSESSOR AGREES TO THE FOLLOWING:
I TO MAINTAIN THIS DOCUMENT IN CONFIDENCE
II NOT TO REPRODUCE OR COPY IT
III NOT TO REVEAL OR PUBLISH IT IN WHOLE OR PART
IV ALL RIGHTS RESERVED

CPU-Based Margining

VRef Dividers

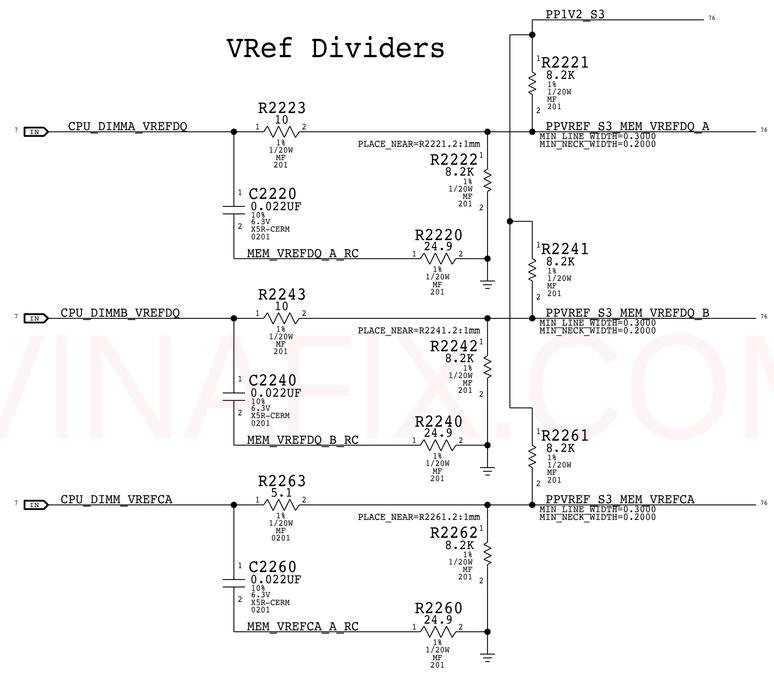

VINAFIX.COM

苹果最新图纸

BOM_COST_GROUP=DRAM

SYNC_MASTER=J122_MLB SYNC_DATE=03/30/2018

PAGE TITLE
LPDDR3 VREF MARGINING

Apple Inc.

DRAWING NUMBER 051-04039 SIZE D

REVISION 2.0.0

BRANCH

PAGE 22 OF 145

SHEET 21 OF 85

NOTICE OF PROPRIETARY PROPERTY:
THE INFORMATION CONTAINED HEREIN IS THE PROPRIETARY PROPERTY OF APPLE INC.
THE POSESSOR AGREES TO THE FOLLOWING:
I TO MAINTAIN THIS DOCUMENT IN CONFIDENCE
II NOT TO REPRODUCE OR COPY IT
III NOT TO REVEAL OR PUBLISH IT IN WHOLE OR PART
IV ALL RIGHTS RESERVED

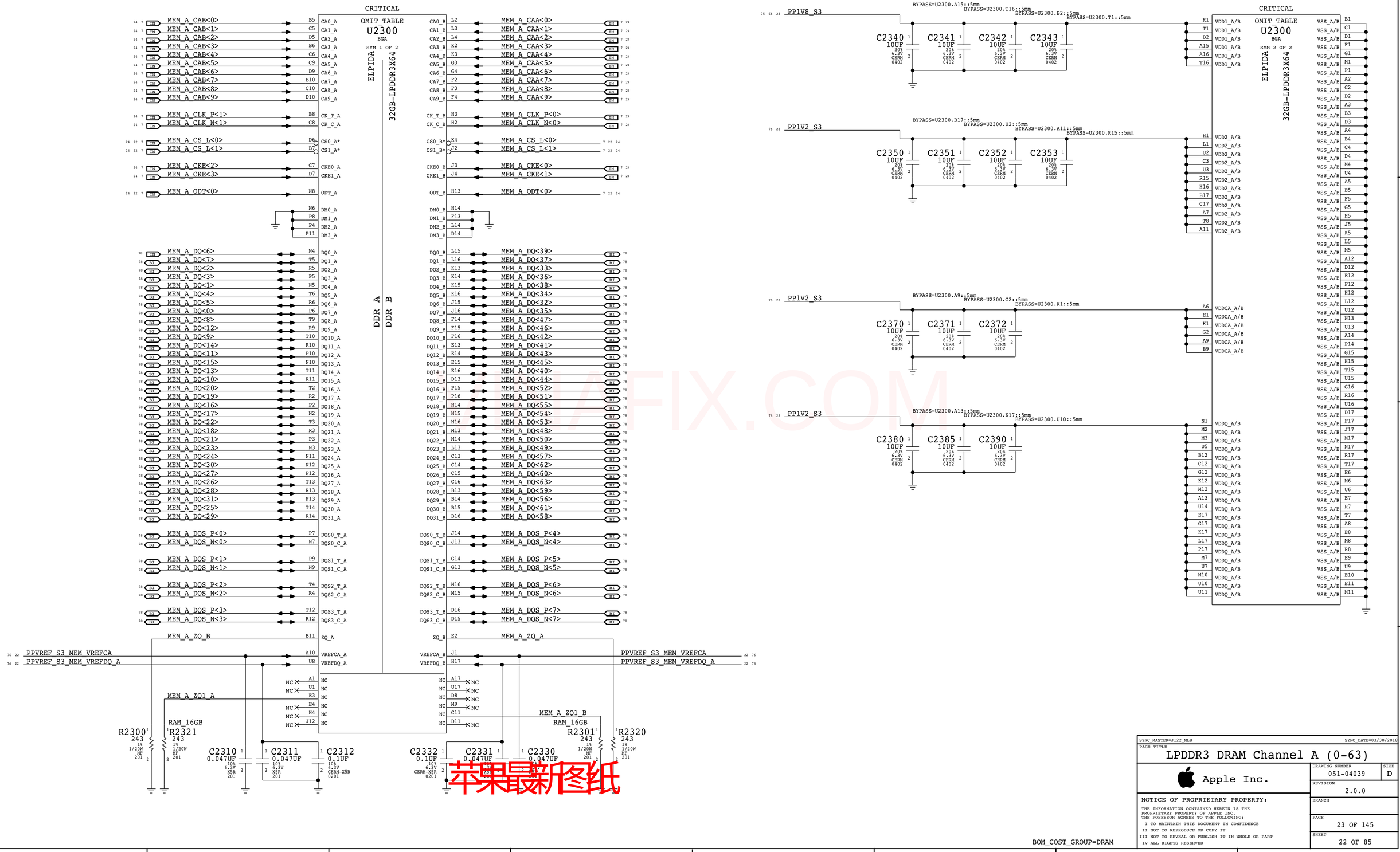
CRITICAL
OMIT_TABLE
U2300
BGA
SYM 1 OF 2
ELPIDA
32GB-LPDDR3X64
DDR A
DDR B
MEM_A_CAB<0>
MEM_A_CAB<1>
MEM_A_CAB<2>
MEM_A_CAB<3>
MEM_A_CAB<4>
MEM_A_CAB<5>
MEM_A_CAB<6>
MEM_A_CAB<7>
MEM_A_CAB<8>
MEM_A_CAB<9>
MEM_A_CLK_P<1>
MEM_A_CLK_N<1>
MEM_A_CS_L<0>
MEM_A_CS_L<1>
MEM_A_CKE<2>
MEM_A_CKE<3>
MEM_A_ODT<0>
MEM_A_CAA<0>
MEM_A_CAA<1>
MEM_A_CAA<2>
MEM_A_CAA<3>
MEM_A_CAA<4>
MEM_A_CAA<5>
MEM_A_CAA<6>
MEM_A_CAA<7>
MEM_A_CAA<8>
MEM_A_CAA<9>
MEM_A_CLK_P<0>
MEM_A_CLK_N<0>
MEM_A_CS_L<0>
MEM_A_CS_L<1>
MEM_A_CKE<0>
MEM_A_CKE<1>
MEM_A_ODT<0>
MEM_A_DQ<6>
MEM_A_DQ<7>
MEM_A_DQ<2>
MEM_A_DQ<3>
MEM_A_DQ<1>
MEM_A_DQ<4>
MEM_A_DQ<5>
MEM_A_DQ<0>
MEM_A_DQ<8>
MEM_A_DQ<12>
MEM_A_DQ<9>
MEM_A_DQ<14>
MEM_A_DQ<11>
MEM_A_DQ<15>
MEM_A_DQ<13>
MEM_A_DQ<10>
MEM_A_DQ<20>
MEM_A_DQ<19>
MEM_A_DQ<16>
MEM_A_DQ<17>
MEM_A_DQ<22>
MEM_A_DQ<18>
MEM_A_DQ<21>
MEM_A_DQ<23>
MEM_A_DQ<24>
MEM_A_DQ<30>
MEM_A_DQ<27>
MEM_A_DQ<26>
MEM_A_DQ<28>
MEM_A_DQ<31>
MEM_A_DQ<25>
MEM_A_DQ<29>
MEM_A_DQ<39>
MEM_A_DQ<37>
MEM_A_DQ<33>
MEM_A_DQ<36>
MEM_A_DQ<38>
MEM_A_DQ<34>
MEM_A_DQ<32>
MEM_A_DQ<35>
MEM_A_DQ<47>
MEM_A_DQ<46>
MEM_A_DQ<42>
MEM_A_DQ<41>
MEM_A_DQ<43>
MEM_A_DQ<45>
MEM_A_DQ<40>
MEM_A_DQ<44>
MEM_A_DQ<52>
MEM_A_DQ<51>
MEM_A_DQ<55>
MEM_A_DQ<54>
MEM_A_DQ<53>
MEM_A_DQ<48>
MEM_A_DQ<50>
MEM_A_DQ<49>
MEM_A_DQ<57>
MEM_A_DQ<62>
MEM_A_DQ<60>
MEM_A_DQ<63>
MEM_A_DQ<59>
MEM_A_DQ<56>
MEM_A_DQ<61>
MEM_A_DQ<58>
MEM_A_DQS_P<0>
MEM_A_DQS_N<0>
MEM_A_DQS_P<1>
MEM_A_DQS_N<1>
MEM_A_DQS_P<2>
MEM_A_DQS_N<2>
MEM_A_DQS_P<3>
MEM_A_DQS_N<3>
MEM_A_DQS_P<4>
MEM_A_DQS_N<4>
MEM_A_DQS_P<5>
MEM_A_DQS_N<5>
MEM_A_DQS_P<6>
MEM_A_DQS_N<6>
MEM_A_DQS_P<7>
MEM_A_DQS_N<7>
MEM_A_ZQ_B
MEM_A_ZQ_A
MEM_A_ZQ1_A
MEM_A_ZQ1_B
PPVREF_S3_MEM_VREFCA
PPVREF_S3_MEM_VREFDQ_A
RAM_16GB
R2300 243 1% 1/20W MF 201
R2321 243 1% 1/20W MF 201
R2301 243 1% 1/20W MF 201
R2320 243 1% 1/20W MF 201
C2310 0.047UF 10% 6.3V X5R 201
C2311 0.047UF 10% 6.3V X5R 201
C2312 0.1UF 10% 6.3V CERM-X5R 0201
C2332 0.1UF 10% 6.3V CERM-X5R 0201
C2331 0.047UF
C2330 0.047UF
PP1V8_S3
PP1V2_S3
BYPASS=U2300.A15::5mm
BYPASS=U2300.T16::5mm
BYPASS=U2300.B2::5mm
BYPASS=U2300.T1::5mm
C2340 10UF 20% 6.3V CERM 0402
C2341 10UF 20% 6.3V CERM 0402
C2342 10UF 20% 6.3V CERM 0402
C2343 10UF 20% 6.3V CERM 0402
BYPASS=U2300.B17::5mm
BYPASS=U2300.U2::5mm
BYPASS=U2300.A11::5mm
BYPASS=U2300.R15::5mm
C2350 10UF 20% 6.3V CERM 0402
C2351 10UF 20% 6.3V CERM 0402
C2352 10UF 20% 6.3V CERM 0402
C2353 10UF 20% 6.3V CERM 0402
BYPASS=U2300.A9::5mm
BYPASS=U2300.G2::5mm
BYPASS=U2300.K1::5mm
C2370 10UF 20% 6.3V CERM 0402
C2371 10UF 20% 6.3V CERM 0402
C2372 10UF 20% 6.3V CERM 0402
BYPASS=U2300.A13::5mm
BYPASS=U2300.K17::5mm
BYPASS=U2300.U10::5mm
C2380 10UF 20% 6.3V CERM 0402
C2385 10UF 20% 6.3V CERM 0402
C2390 10UF 20% 6.3V CERM 0402
VDD1_A/B
VDD2_A/B
VDDCA_A/B
VDDQ_A/B
VSS_A/B
BOM_COST_GROUP=DRAM
SYNC_MASTER=J122_MLB
SYNC_DATE=03/30/2018
PAGE TITLE
LPDDR3 DRAM Channel A (0-63)
Apple Inc.
DRAWING NUMBER
051-04039
SIZE
D
REVISION
2.0.0
BRANCH
PAGE
23 OF 145
SHEET
22 OF 85
NOTICE OF PROPRIETARY PROPERTY:
THE INFORMATION CONTAINED HEREIN IS THE PROPRIETARY PROPERTY OF APPLE INC.
THE POSESSOR AGREES TO THE FOLLOWING:
I TO MAINTAIN THIS DOCUMENT IN CONFIDENCE
II NOT TO REPRODUCE OR COPY IT
III NOT TO REVEAL OR PUBLISH IT IN WHOLE OR PART
IV ALL RIGHTS RESERVED

苹果最新图纸

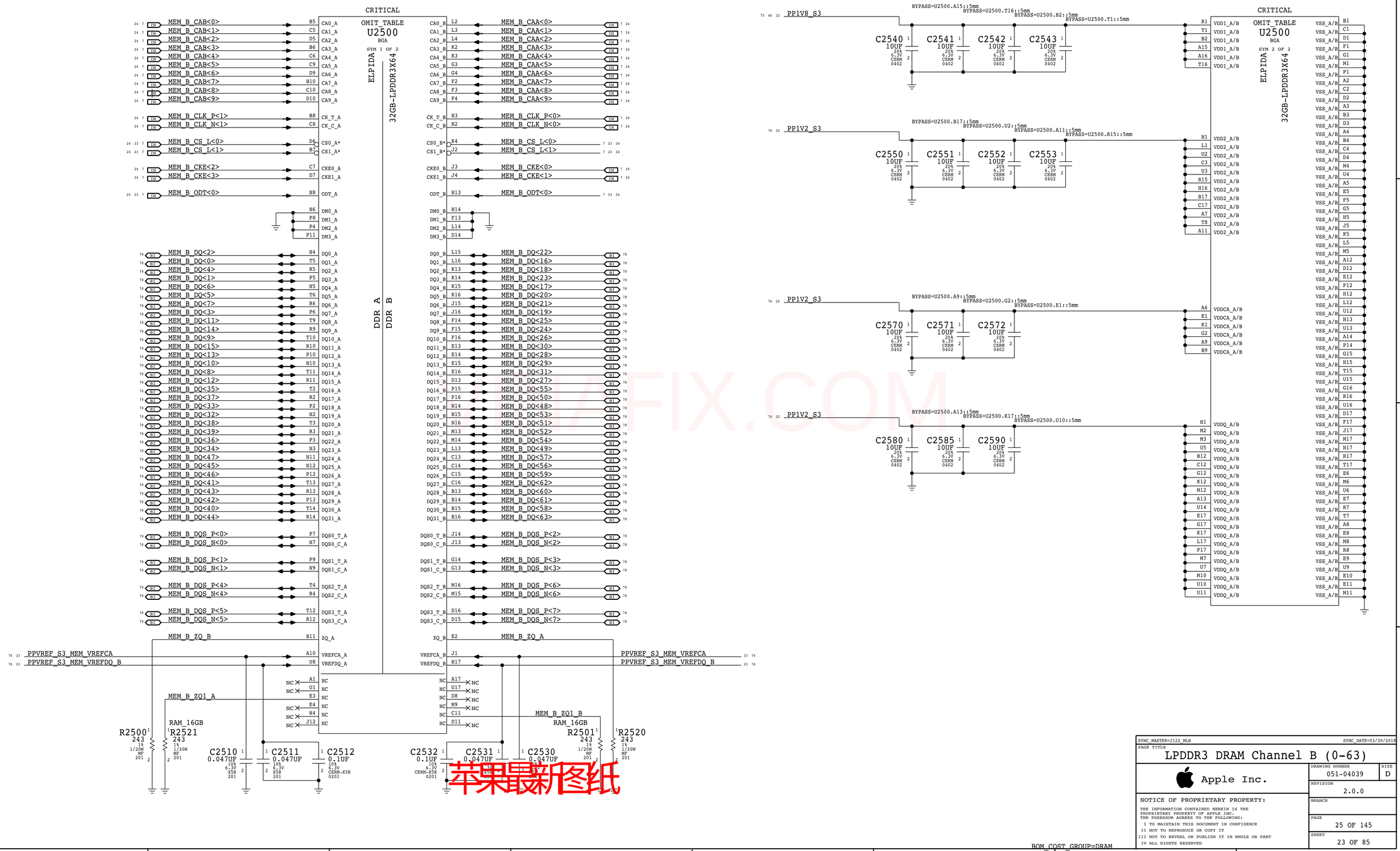
CRITICAL
OMIT_TABLE
U2500
BGA
SYM 1 OF 2
ELPIDA
32GB-LPDDR3X64
DDR A
DDR B
MEM_B_CAB<0>
MEM_B_CAB<1>
MEM_B_CAB<2>
MEM_B_CAB<3>
MEM_B_CAB<4>
MEM_B_CAB<5>
MEM_B_CAB<6>
MEM_B_CAB<7>
MEM_B_CAB<8>
MEM_B_CAB<9>
MEM_B_CLK_P<1>
MEM_B_CLK_N<1>
MEM_B_CS_L<0>
MEM_B_CS_L<1>
MEM_B_CKE<2>
MEM_B_CKE<3>
MEM_B_ODT<0>
MEM_B_CAA<0>
MEM_B_CAA<1>
MEM_B_CAA<2>
MEM_B_CAA<3>
MEM_B_CAA<4>
MEM_B_CAA<5>
MEM_B_CAA<6>
MEM_B_CAA<7>
MEM_B_CAA<8>
MEM_B_CAA<9>
MEM_B_CLK_P<0>
MEM_B_CLK_N<0>
MEM_B_CS_L<0>
MEM_B_CS_L<1>
MEM_B_CKE<0>
MEM_B_CKE<1>
MEM_B_ODT<0>
MEM_B_DQ<2>
MEM_B_DQ<0>
MEM_B_DQ<4>
MEM_B_DQ<1>
MEM_B_DQ<6>
MEM_B_DQ<5>
MEM_B_DQ<7>
MEM_B_DQ<3>
MEM_B_DQ<11>
MEM_B_DQ<14>
MEM_B_DQ<9>
MEM_B_DQ<15>
MEM_B_DQ<13>
MEM_B_DQ<10>
MEM_B_DQ<8>
MEM_B_DQ<12>
MEM_B_DQ<35>
MEM_B_DQ<37>
MEM_B_DQ<33>
MEM_B_DQ<32>
MEM_B_DQ<38>
MEM_B_DQ<39>
MEM_B_DQ<36>
MEM_B_DQ<34>
MEM_B_DQ<47>
MEM_B_DQ<45>
MEM_B_DQ<46>
MEM_B_DQ<41>
MEM_B_DQ<43>
MEM_B_DQ<42>
MEM_B_DQ<40>
MEM_B_DQ<44>
MEM_B_DQ<22>
MEM_B_DQ<16>
MEM_B_DQ<18>
MEM_B_DQ<23>
MEM_B_DQ<17>
MEM_B_DQ<20>
MEM_B_DQ<21>
MEM_B_DQ<19>
MEM_B_DQ<25>
MEM_B_DQ<24>
MEM_B_DQ<26>
MEM_B_DQ<30>
MEM_B_DQ<28>
MEM_B_DQ<29>
MEM_B_DQ<31>
MEM_B_DQ<27>
MEM_B_DQ<55>
MEM_B_DQ<50>
MEM_B_DQ<48>
MEM_B_DQ<53>
MEM_B_DQ<51>
MEM_B_DQ<52>
MEM_B_DQ<54>
MEM_B_DQ<49>
MEM_B_DQ<57>
MEM_B_DQ<56>
MEM_B_DQ<59>
MEM_B_DQ<62>
MEM_B_DQ<60>
MEM_B_DQ<61>
MEM_B_DQ<58>
MEM_B_DQ<63>
MEM_B_DQS_P<0>
MEM_B_DQS_N<0>
MEM_B_DQS_P<1>
MEM_B_DQS_N<1>
MEM_B_DQS_P<4>
MEM_B_DQS_N<4>
MEM_B_DQS_P<5>
MEM_B_DQS_N<5>
MEM_B_DQS_P<2>
MEM_B_DQS_N<2>
MEM_B_DQS_P<3>
MEM_B_DQS_N<3>
MEM_B_DQS_P<6>
MEM_B_DQS_N<6>
MEM_B_DQS_P<7>
MEM_B_DQS_N<7>
MEM_B_ZQ_B
MEM_B_ZQ_A
PPVREF_S3_MEM_VREFCA
PPVREF_S3_MEM_VREFDQ_B
MEM_B_ZQ1_A
MEM_B_ZQ1_B
RAM_16GB
R2500 243 1% 1/20W MF 201
R2521 243 1% 1/20W MF 201
R2501 243 1% 1/20W MF 201
R2520 243 1% 1/20W MF 201
C2510 0.047UF 10% 6.3V X5R 201
C2511 0.047UF 10% 6.3V X5R 201
C2512 0.1UF 10% 6.3V CERM-X5R 0201
C2532 0.1UF 10% 6.3V CERM-X5R 0201
C2531 0.047UF
C2530 0.047UF
PP1V8_S3
PP1V2_S3
C2540 10UF 20% 6.3V CERM 0402
C2541 10UF 20% 6.3V CERM 0402
C2542 10UF 20% 6.3V CERM 0402
C2543 10UF 20% 6.3V CERM 0402
C2550 10UF 20% 6.3V CERM 0402
C2551 10UF 20% 6.3V CERM 0402
C2552 10UF 20% 6.3V CERM 0402
C2553 10UF 20% 6.3V CERM 0402
C2570 10UF 20% 6.3V CERM 0402
C2571 10UF 20% 6.3V CERM 0402
C2572 10UF 20% 6.3V CERM 0402
C2580 10UF 20% 6.3V CERM 0402
C2585 10UF 20% 6.3V CERM 0402
C2590 10UF 20% 6.3V CERM 0402
BYPASS=U2500.A15::5mm
BYPASS=U2500.T16::5mm
BYPASS=U2500.B2::5mm
BYPASS=U2500.T1::5mm
BYPASS=U2500.B17::5mm
BYPASS=U2500.U2::5mm
BYPASS=U2500.A11::5mm
BYPASS=U2500.R15::5mm
BYPASS=U2500.A9::5mm
BYPASS=U2500.G2::5mm
BYPASS=U2500.E1::5mm
BYPASS=U2500.A13::5mm
BYPASS=U2500.K17::5mm
BYPASS=U2500.U10::5mm
VDD1_A/B
VDD2_A/B
VDDCA_A/B
VDDQ_A/B
VSS_A/B
BOM_COST_GROUP=DRAM
SYNC_MASTER=J122_MLB
SYNC_DATE=03/30/2018
PAGE TITLE
LPDDR3 DRAM Channel B (0-63)
Apple Inc.
DRAWING NUMBER
051-04039
SIZE
D
REVISION
2.0.0
BRANCH
PAGE
25 OF 145
SHEET
23 OF 85
NOTICE OF PROPRIETARY PROPERTY:
THE INFORMATION CONTAINED HEREIN IS THE PROPRIETARY PROPERTY OF APPLE INC.
THE POSESSOR AGREES TO THE FOLLOWING:
I TO MAINTAIN THIS DOCUMENT IN CONFIDENCE
II NOT TO REPRODUCE OR COPY IT
III NOT TO REVEAL OR PUBLISH IT IN WHOLE OR PART
IV ALL RIGHTS RESERVED
苹果最新图纸

Intel recommends 68 Ohm for CMD/ADDR, 80 Ohm for CTRL/CKE, 38 Ohm for CLK

PP0V6_S0_DDRVTT

MEM_A_CAA<9>	R2700	68	1%	1/32W	01005	TK	C2700 0.47UF 20% 4V CERM-X5R-1 201	C2730 12PF 5% 25V NPO-C0G 0201
MEM_A_CAA<8>	R2701	68	1%	1/32W	01005	TK		
MEM_A_CAA<6>	R2702	68	1%	1/32W	01005	TK		
MEM_A_CAA<7>	R2703	68	1%	1/32W	01005	TK		
MEM_A_CAA<5>	R2704	68	1%	1/32W	01005	TK		
MEM_A_CLK_P<0>	R2705	38.3	1%	1/32W	01005	TK	C2701 0.47UF 20% 4V CERM-X5R-1 201	C2702 0.47UF 20% 4V CERM-X5R-1 201
MEM_A_CLK_N<0>	R2706	38.3	1%	1/32W	01005	TK		
MEM_A_CKE<1>	R2707	80.6	1%	1/32W	01005	TK		
MEM_A_CKE<0>	R2708	80.6	1%	1/32W	01005	MF		
MEM_A_CAA<4>	R2709	68	1%	1/32W	01005	MF		
MEM_A_CAA<3>	R2710	68	1%	1/32W	01005	TK	C2703 0.47UF 20% 4V CERM-X5R-1 201	C2704 0.47UF 20% 4V CERM-X5R-1 201
MEM_A_CAA<2>	R2711	68	1%	1/32W	01005	TK		
MEM_A_CAA<1>	R2712	68	1%	1/32W	01005	TK		
MEM_A_CAA<0>	R2713	68	1%	1/32W	01005	TK		
MEM_A_CAB<9>	R2714	68	1%	1/32W	01005	TK		
MEM_A_CAB<8>	R2715	68	1%	1/32W	01005	TK		
MEM_A_CAB<6>	R2716	68	1%	1/32W	01005	TK	C2705 0.47UF 20% 4V CERM-X5R-1 201	C2706 0.47UF 20% 4V CERM-X5R-1 201
MEM_A_CAB<7>	R2717	68	1%	1/32W	01005	TK		
MEM_A_CAB<5>	R2718	68	1%	1/32W	01005	TK		
MEM_A_CLK_P<1>	R2719	38.3	1%	1/32W	01005	TK		
MEM_A_CLK_N<1>	R2720	38.3	1%	1/32W	01005	TK		
MEM_A_CKE<2>	R2721	80.6	1%	1/32W	01005	TK	C2707 0.47UF 20% 4V CERM-X5R-1 201	C2708 0.47UF 20% 4V CERM-X5R-1 201
MEM_A_CKE<3>	R2722	80.6	1%	1/32W	01005	MF		
MEM_A_CAB<4>	R2723	68	1%	1/32W	01005	MF		
MEM_A_CAB<2>	R2724	68	1%	1/32W	01005	TK		
MEM_A_CAB<3>	R2725	68	1%	1/32W	01005	TK		
MEM_A_CAB<1>	R2726	68	1%	1/32W	01005	TK		
MEM_A_CAB<0>	R2727	68	1%	1/32W	01005	TK		
MEM_A_CS_L<0>	R2728	80.6	1%	1/32W	01005	TK		
MEM_A_CS_L<1>	R2729	80.6	1%	1/32W	01005	MF		
MEM_A_ODT<0>	R2730	80.6	1%	1/32W	01005	MF	C2709 0.47UF 20% 4V CERM-X5R-1 201	
			1%	1/32W	01005	MF		

CRITICAL
C2720 20UF 20% 6.3V CERM-X5R 0402
C2722 3.0PF ±0.1PF 25V NPO-C0G 0201

PP0V6_S0_DDRVTT

MEM_B_CAA<9>	R2740	68	1%	1/32W	01005	TK	C2710 0.47UF 20% 4V CERM-X5R-1 201	C2731 12PF 5% 25V NPO-C0G 0201
MEM_B_CAA<8>	R2741	68	1%	1/32W	01005	TK		
MEM_B_CAA<7>	R2742	68	1%	1/32W	01005	TK		
MEM_B_CAA<6>	R2743	68	1%	1/32W	01005	TK		
MEM_B_CAA<5>	R2744	68	1%	1/32W	01005	TK		
MEM_B_CLK_P<0>	R2745	38.3	1%	1/32W	01005	TK	C2711 0.47UF 20% 4V CERM-X5R-1 201	C2712 0.47UF 20% 4V CERM-X5R-1 201
MEM_B_CLK_N<0>	R2746	38.3	1%	1/32W	01005	TK		
MEM_B_CKE<1>	R2747	80.6	1%	1/32W	01005	TK		
MEM_B_CKE<0>	R2748	80.6	1%	1/32W	01005	MF		
MEM_B_CAA<4>	R2749	68	1%	1/32W	01005	MF		
MEM_B_CAA<2>	R2750	68	1%	1/32W	01005	TK	C2713 0.47UF 20% 4V CERM-X5R-1 201	C2714 0.47UF 20% 4V CERM-X5R-1 201
MEM_B_CAA<3>	R2751	68	1%	1/32W	01005	TK		
MEM_B_CAA<1>	R2752	68	1%	1/32W	01005	TK		
MEM_B_CAA<0>	R2753	68	1%	1/32W	01005	TK		
MEM_B_CAB<9>	R2754	68	1%	1/32W	01005	TK		
MEM_B_CAB<8>	R2755	68	1%	1/32W	01005	TK		
MEM_B_CAB<7>	R2756	68	1%	1/32W	01005	TK	C2715 0.47UF 20% 4V CERM-X5R-1 201	C2716 0.47UF 20% 4V CERM-X5R-1 201
MEM_B_CAB<6>	R2757	68	1%	1/32W	01005	TK		
MEM_B_CAB<5>	R2758	68	1%	1/32W	01005	TK		
MEM_B_CLK_N<1>	R2759	38.3	1%	1/32W	01005	TK		
MEM_B_CLK_P<1>	R2760	38.3	1%	1/32W	01005	TK		
MEM_B_CKE<2>	R2761	80.6	1%	1/32W	01005	TK	C2717 0.47UF 20% 4V CERM-X5R-1 201	C2718 0.47UF 20% 4V CERM-X5R-1 201
MEM_B_CKE<3>	R2762	80.6	1%	1/32W	01005	MF		
MEM_B_CAB<4>	R2763	68	1%	1/32W	01005	MF		
MEM_B_CAB<2>	R2764	68	1%	1/32W	01005	TK		
MEM_B_CAB<3>	R2765	68	1%	1/32W	01005	TK		
MEM_B_CAB<1>	R2766	68	1%	1/32W	01005	TK		
MEM_B_CAB<0>	R2767	68	1%	1/32W	01005	TK		
MEM_B_CS_L<0>	R2768	80.6	1%	1/32W	01005	TK		
MEM_B_CS_L<1>	R2769	80.6	1%	1/32W	01005	MF		
MEM_B_ODT<0>	R2770	80.6	1%	1/32W	01005	MF	C2719 0.47UF 20% 4V CERM-X5R-1 201	
			1%	1/32W	01005	MF		

CRITICAL
C2740 20UF 20% 6.3V CERM-X5R 0402
C2742 3.0PF ±0.1PF 25V NPO-C0G 0201

VIDIAFIX.COM

苹果最新图纸

BOM_COST_GROUP=DRAM

SYNC_MASTER=T290_CARD_CPU_U SYNC_DATE=04/06/2018

PAGE TITLE
LPDDR3 DRAM Termination

Apple Inc.

DRAWING NUMBER 051-04039 SIZE D
REVISION 2.0.0
BRANCH
PAGE 27 OF 145
SHEET 24 OF 85

NOTICE OF PROPRIETARY PROPERTY:
THE INFORMATION CONTAINED HEREIN IS THE PROPRIETARY PROPERTY OF APPLE INC.
THE POSESSOR AGREES TO THE FOLLOWING:
I TO MAINTAIN THIS DOCUMENT IN CONFIDENCE
II NOT TO REPRODUCE OR COPY IT
III NOT TO REVEAL OR PUBLISH IT IN WHOLE OR PART
IV ALL RIGHTS RESERVED

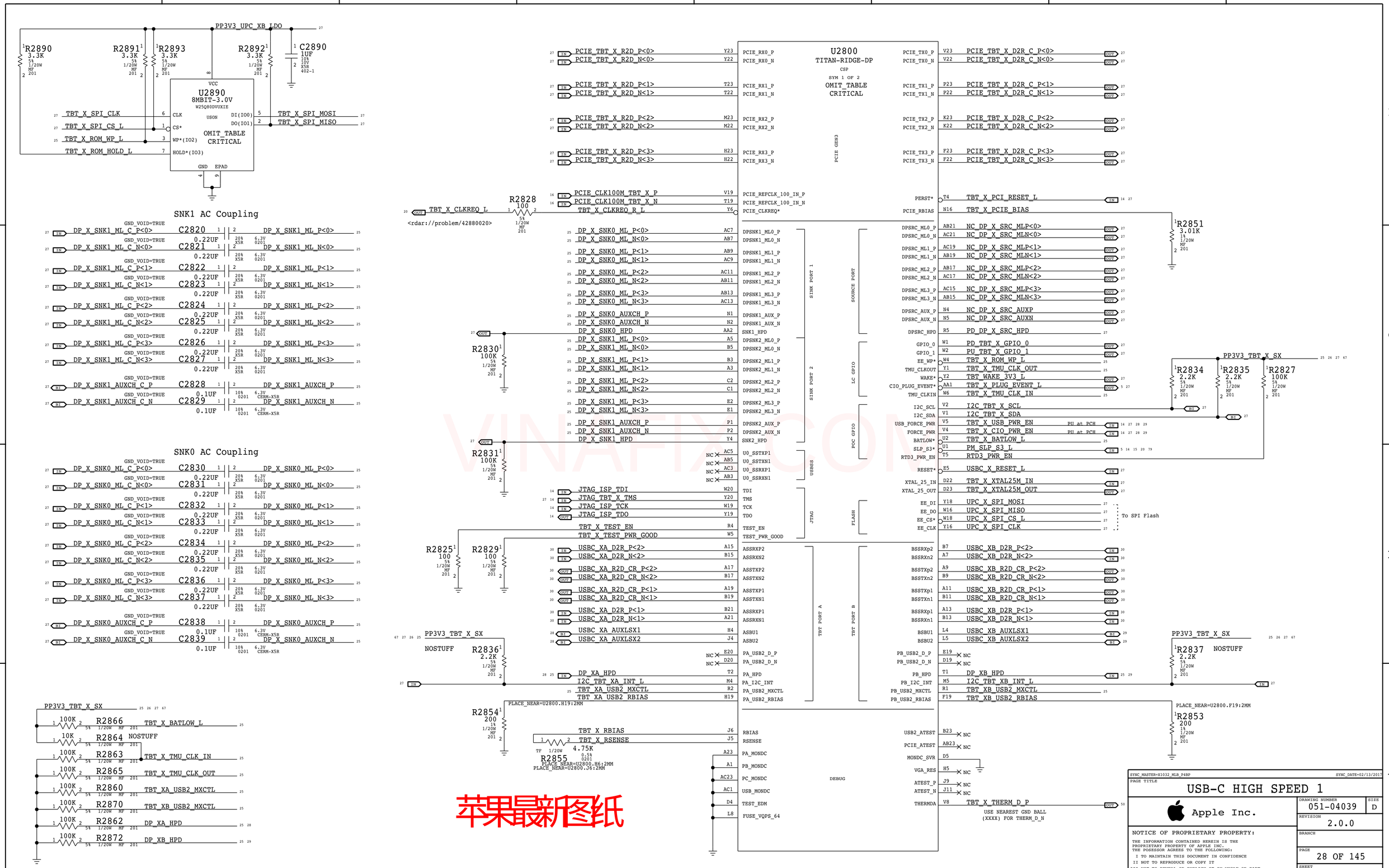
PP3V3_UPC_XB_LDO
R2890 3.3K 5% 1/20W MF 201
R2891 3.3K 5% 1/20W MF 201
R2893 3.3K 5% 1/20W MF 201
R2892 3.3K 5% 1/20W MF 201
C2890 1UF 10% 10V X5R 402-1
U2890 8MBIT-3.0V W25Q80DVUXIE USON
OMIT_TABLE CRITICAL
TBT_X_SPI_CLK
TBT_X_SPI_CS_L
TBT_X_ROM_WP_L
TBT_X_ROM_HOLD_L
TBT_X_SPI_MOSI
TBT_X_SPI_MISO
SNK1 AC Coupling
SNK0 AC Coupling
U2800 TITAN-RIDGE-DP CSP SYM 1 OF 2
OMIT_TABLE CRITICAL
PCIE GEN3
SINK PORT 1
SINK PORT 2
SOURCE PORT
LC GIO
POC GIO
USB3S
JTAG
FLASH
TBT PORT A
TBT PORT B
DEBUG
R2828 100 5% 1/20W MF 201
R2830 100K 5% 1/20W MF 201
R2831 100K 5% 1/20W MF 201
R2825 100 5% 1/20W MF 201
R2829 100 5% 1/20W MF 201
R2836 2.2K 5% 1/20W MF 201
R2854 200 1% 1/20W MF 201
R2855 4.75K 0.5% 0201
R2851 3.01K 1% 1/20W MF 201
R2834 2.2K 5% 1/20W MF 201
R2835 2.2K 5% 1/20W MF 201
R2827 100K 5% 1/20W MF 201
R2837 2.2K 5% 1/20W MF 201
R2853 200 1% 1/20W MF 201
R2866 100K
R2864 10K
R2863 100K
R2865 100K
R2860 100K
R2870 100K
R2862 100K
R2872 100K
USB-C HIGH SPEED 1
Apple Inc.
051-04039
2.0.0
28 OF 145
25 OF 85
BOM_COST_GROUP=TBT
NOTICE OF PROPRIETARY PROPERTY:
THE INFORMATION CONTAINED HEREIN IS THE PROPRIETARY PROPERTY OF APPLE INC.
THE POSESSOR AGREES TO THE FOLLOWING:
I TO MAINTAIN THIS DOCUMENT IN CONFIDENCE
II NOT TO REPRODUCE OR COPY IT
III NOT TO REVEAL OR PUBLISH IT IN WHOLE OR PART
IV ALL RIGHTS RESERVED
苹果最新图纸

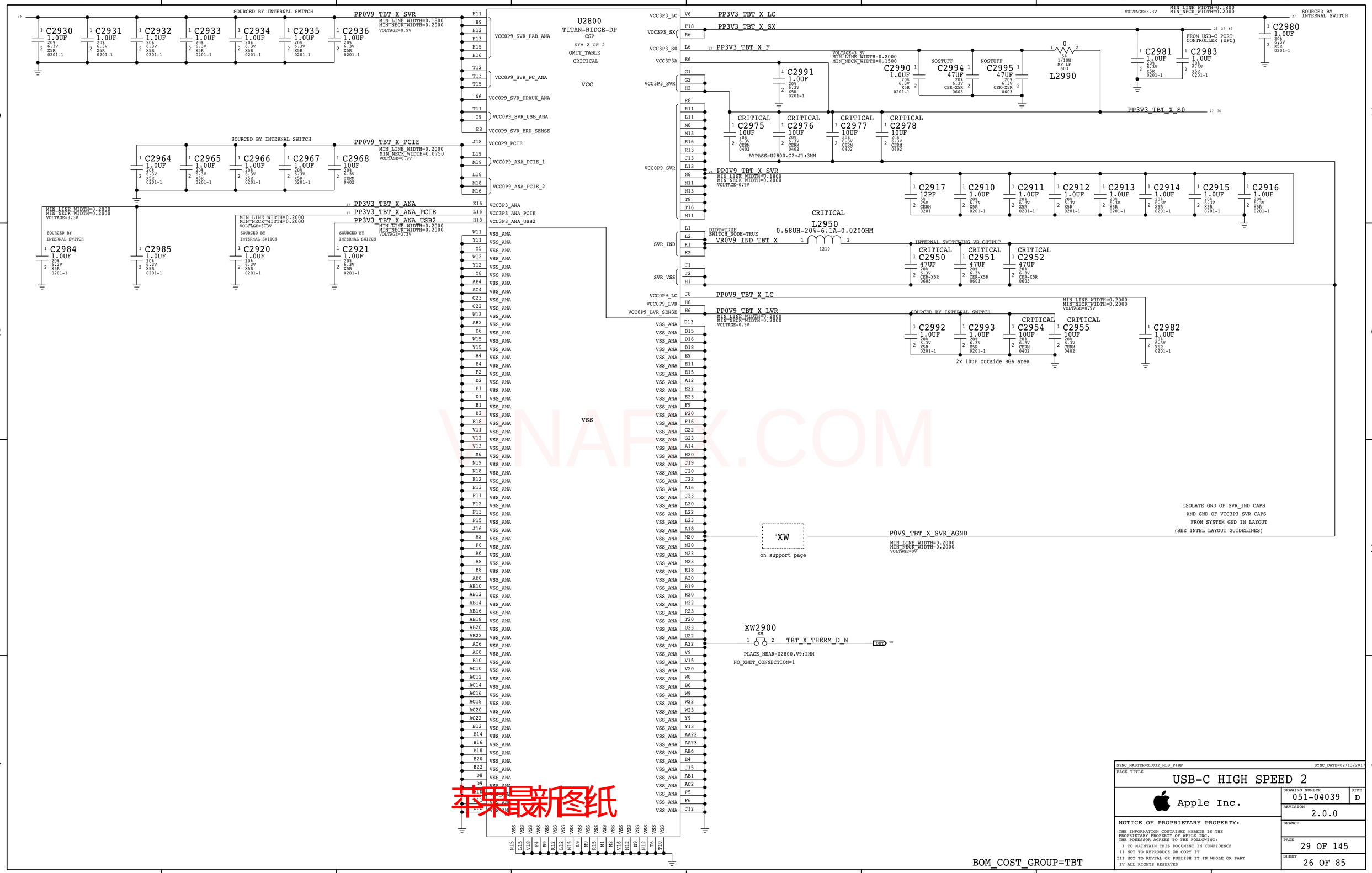

SYNC_MASTER=X103Z_MLB_P4BP SYNC_DATE=02/13/2017

PAGE TITLE

USB-C HIGH SPEED 2

Apple Inc.

DRAWING NUMBER 051-04039 SIZE D

REVISION 2.0.0

BRANCH

PAGE 29 OF 145

SHEET 26 OF 85

NOTICE OF PROPRIETARY PROPERTY:

THE INFORMATION CONTAINED HEREIN IS THE PROPRIETARY PROPERTY OF APPLE INC. THE POSESSOR AGREES TO THE FOLLOWING:

I TO MAINTAIN THIS DOCUMENT IN CONFIDENCE

II NOT TO REPRODUCE OR COPY IT

III NOT TO REVEAL OR PUBLISH IT IN WHOLE OR PART

IV ALL RIGHTS RESERVED

苹果最新图纸

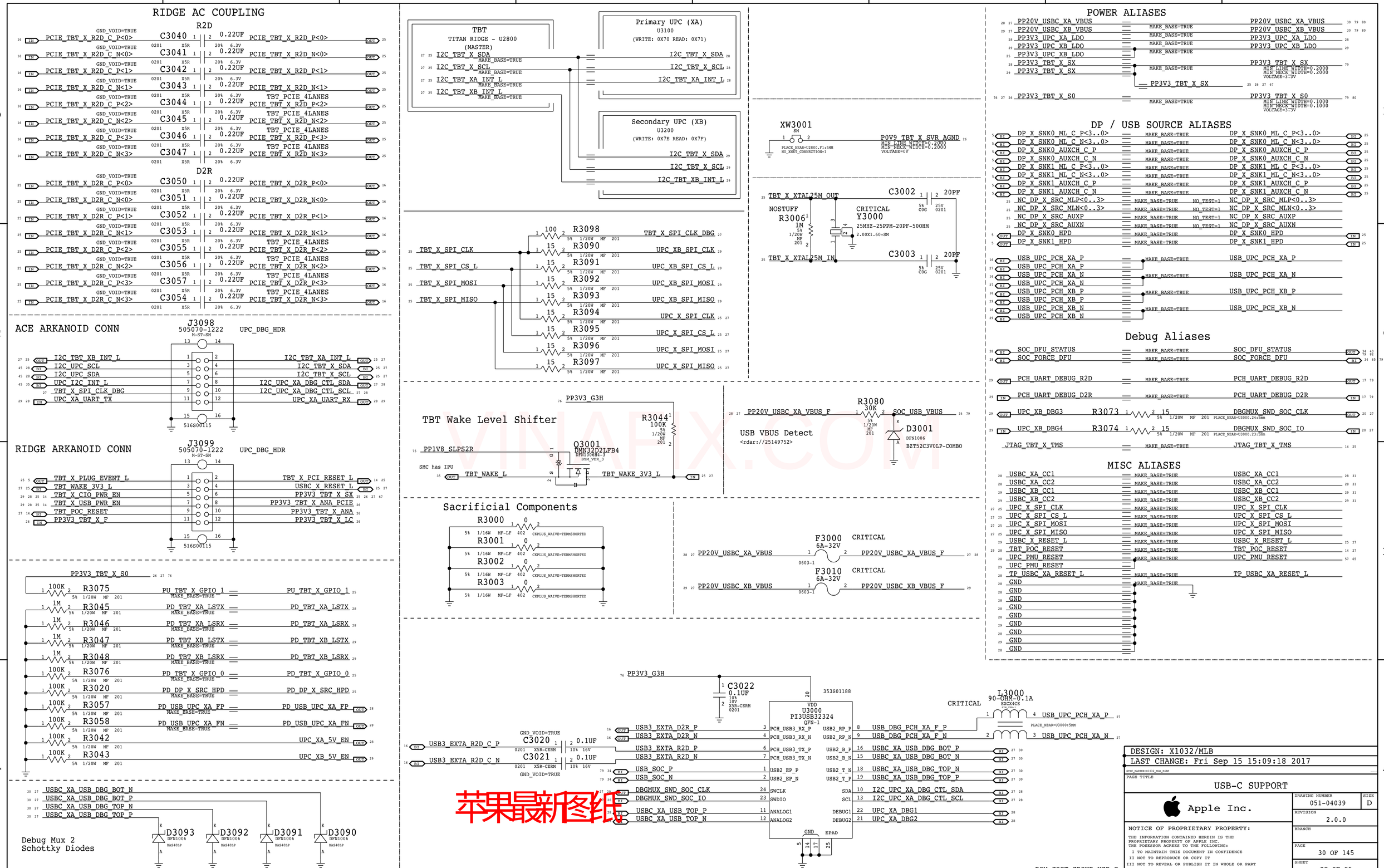

VINAFIX.COM
苹果最新图纸

PRIMARY ACE USB-C PORT CONTROLLER (UPC)

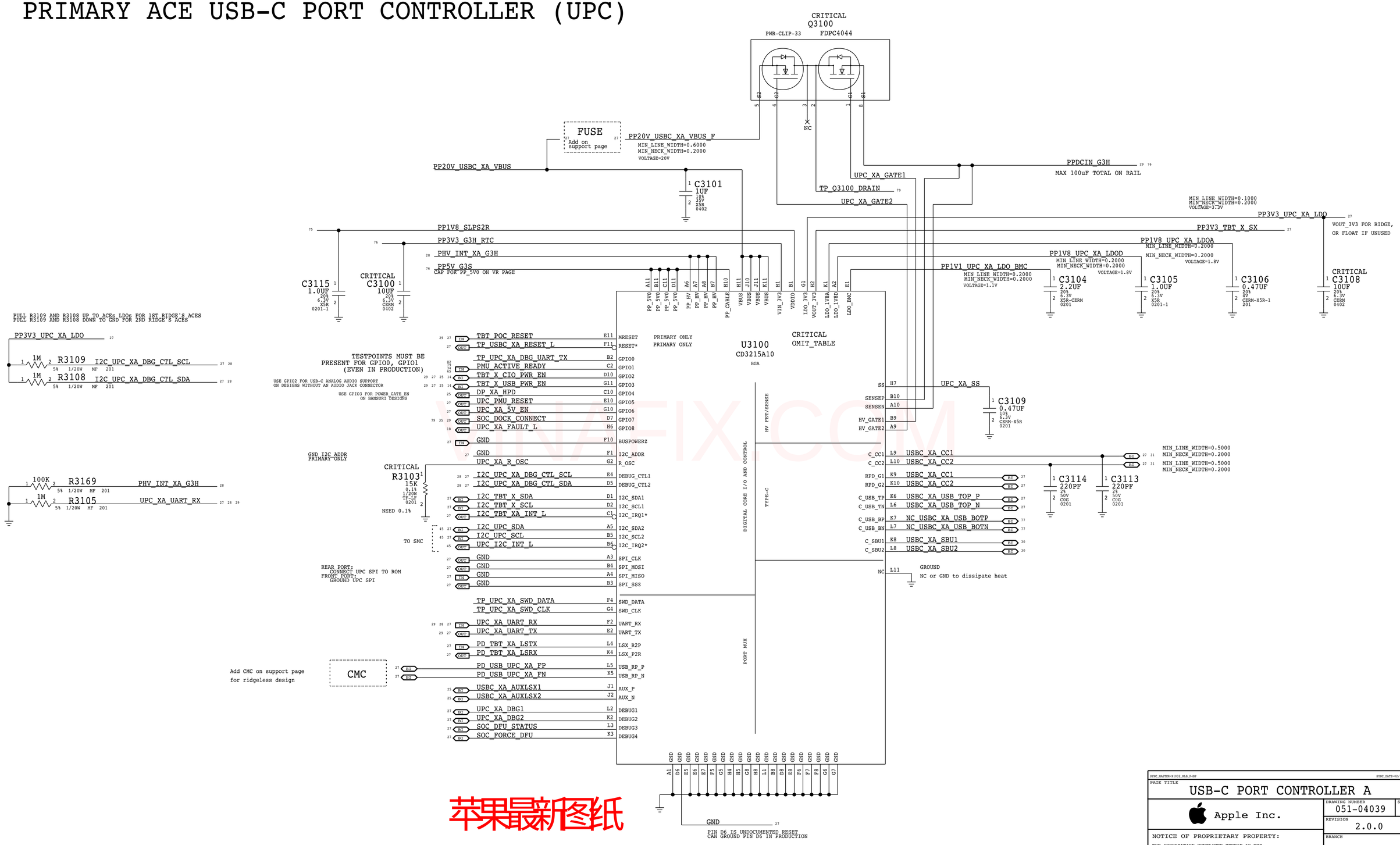

苹果最新图纸

BOM_COST_GROUP=USB-C

SYNC_MASTER=K1032_MLB_P480 SYNC_DATE=02/13/2017

PAGE TITLE

USB-C PORT CONTROLLER A

Apple Inc.

DRAWING NUMBER 051-04039 SIZE D

REVISION 2.0.0

BRANCH

PAGE 31 OF 145

SHEET 28 OF 85

NOTICE OF PROPRIETARY PROPERTY:
THE INFORMATION CONTAINED HEREIN IS THE PROPRIETARY PROPERTY OF APPLE INC.
THE POSESSOR AGREES TO THE FOLLOWING:
I TO MAINTAIN THIS DOCUMENT IN CONFIDENCE
II NOT TO REPRODUCE OR COPY IT
III NOT TO REVEAL OR PUBLISH IT IN WHOLE OR PART
IV ALL RIGHTS RESERVED

SECONDARY ACE USB-C PORT CONTROLLER (UPC)

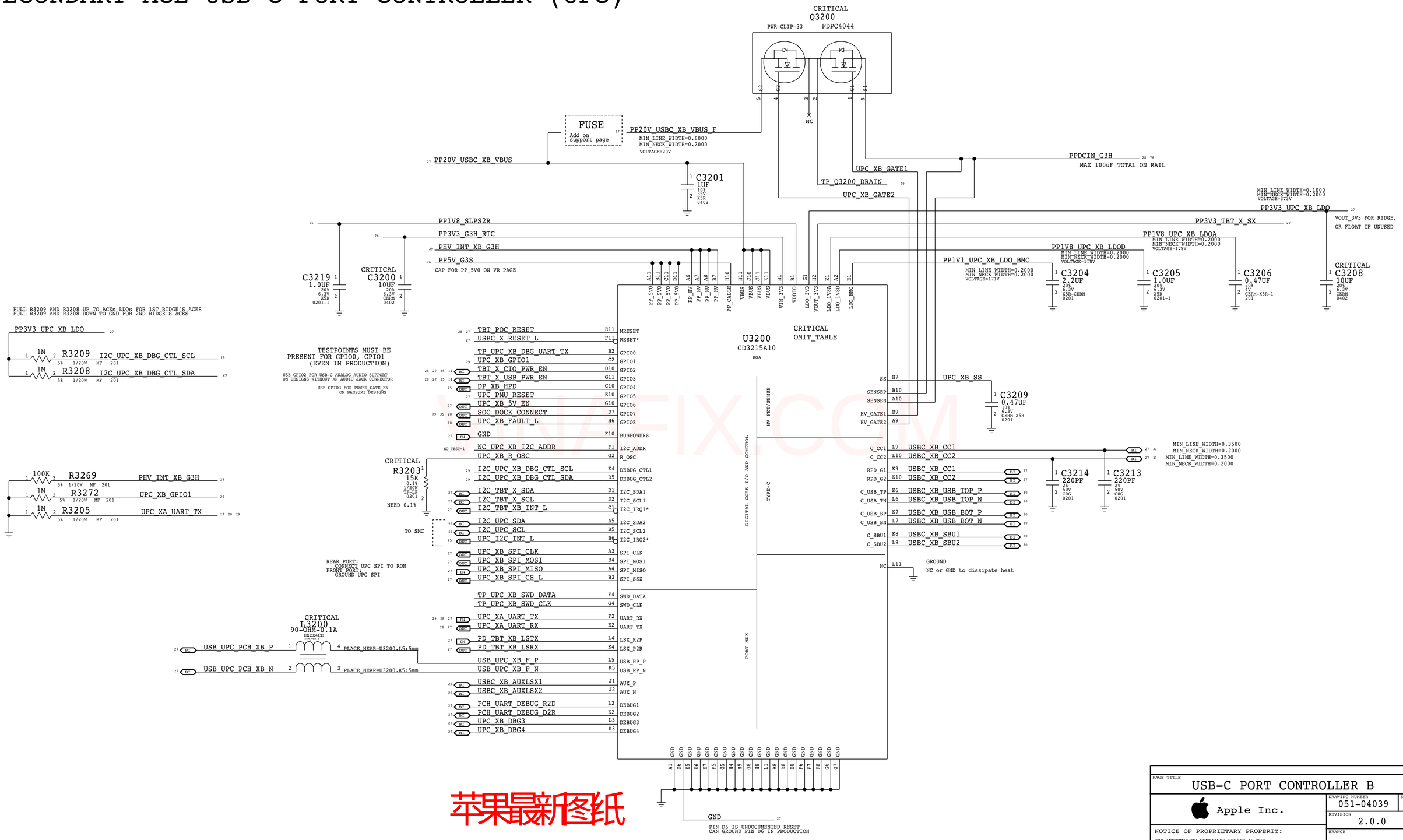

苹果最新图纸

PAGE TITLE	USB-C PORT CONTROLLER B
Apple Inc.	DRAWING NUMBER 051-04039 SIZE D
	REVISION 2.0.0
	BRANCH
	PAGE 32 OF 145
	SHEET 29 OF 85

NOTICE OF PROPRIETARY PROPERTY:
THE INFORMATION CONTAINED HEREIN IS THE PROPRIETARY PROPERTY OF APPLE INC.
THE POSESSOR AGREES TO THE FOLLOWING:
I TO MAINTAIN THIS DOCUMENT IN CONFIDENCE
II NOT TO REPRODUCE OR COPY IT
III NOT TO REVEAL OR PUBLISH IT IN WHOLE OR PART
IV ALL RIGHTS RESERVED

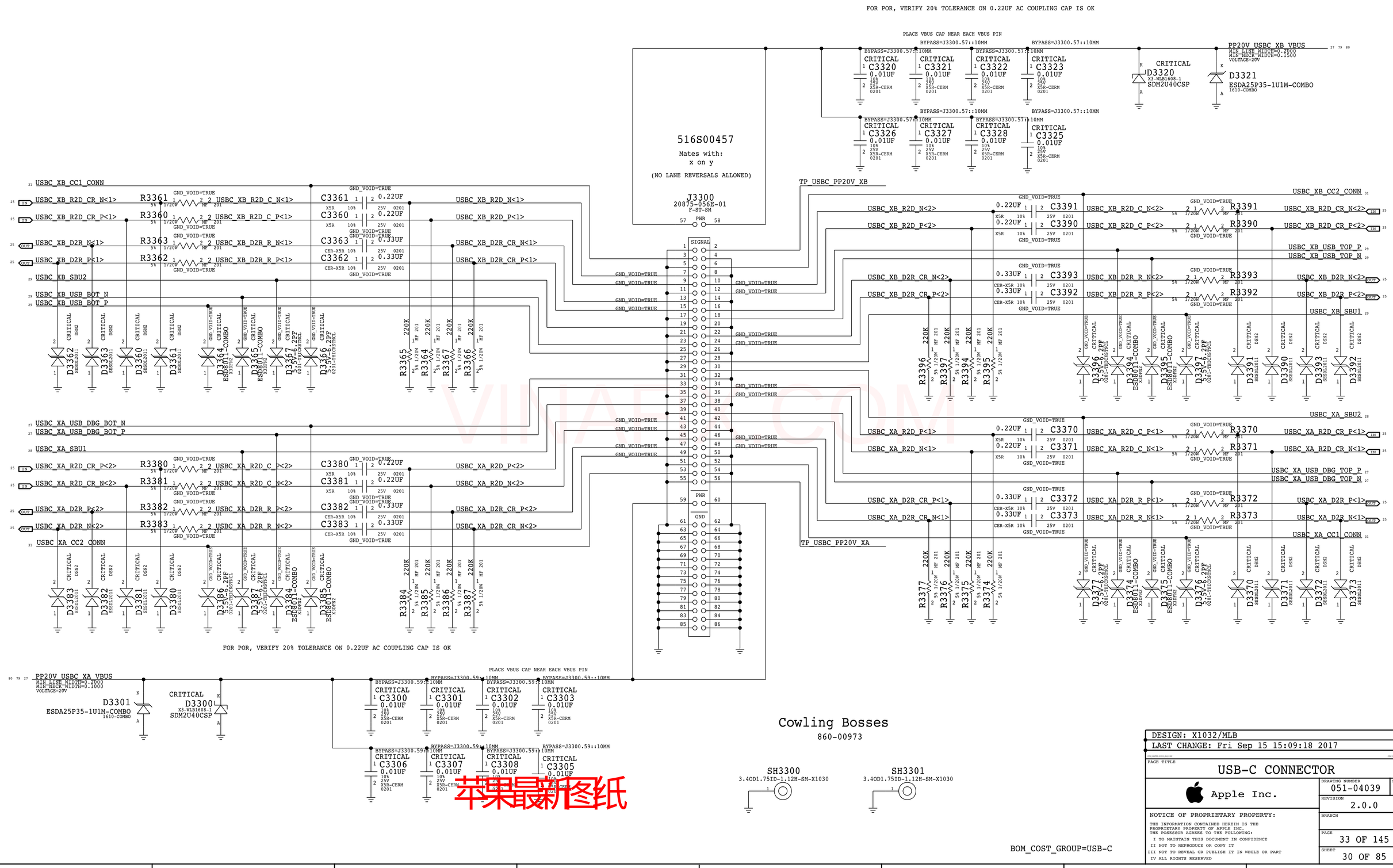
FOR POR, VERIFY 20% TOLERANCE ON 0.22UF AC COUPLING CAP IS OK
PLACE VBUS CAP NEAR EACH VBUS PIN
516S00457
Mates with:
x on y
(NO LANE REVERSALS ALLOWED)
J3300
20875-056E-01
F-ST-SM
PP20V_USBC_XB_VBUS
MIN_LINE_WIDTH=0.2000
MIN_NECK_WIDTH=0.1500
VOLTAGE=20V
D3320
X3-WLB1608-1
SDM2U40CSP
D3321
ESDA25P35-1U1M-COMBO
1610-COMBO
TP_USBC_PP20V_XB
TP_USBC_PP20V_XA
USBC_XB_CC1_CONN
USBC_XB_CC2_CONN
USBC_XB_R2D_CR_N<1>
USBC_XB_R2D_CR_P<1>
USBC_XB_D2R_N<1>
USBC_XB_D2R_P<1>
USBC_XB_SBU2
USBC_XB_USB_BOT_N
USBC_XB_USB_BOT_P
USBC_XB_USB_TOP_P
USBC_XB_USB_TOP_N
USBC_XB_SBU1
USBC_XA_USB_DBG_BOT_N
USBC_XA_USB_DBG_BOT_P
USBC_XA_SBU1
USBC_XA_SBU2
USBC_XA_USB_DBG_TOP_P
USBC_XA_USB_DBG_TOP_N
USBC_XA_CC2_CONN
USBC_XA_CC1_CONN
PP20V_USBC_XA_VBUS
MIN_LINE_WIDTH=0.2000
MIN_NECK_WIDTH=0.1000
VOLTAGE=20V
D3301
ESDA25P35-1U1M-COMBO
1610-COMBO
D3300
X3-WLB1608-1
SDM2U40CSP
Cowling Bosses
860-00973
SH3300
3.40D1.75ID-1.12H-SM-X1030
SH3301
3.40D1.75ID-1.12H-SM-X1030
BOM_COST_GROUP=USB-C
DESIGN: X1032/MLB
LAST CHANGE: Fri Sep 15 15:09:18 2017
PAGE TITLE
USB-C CONNECTOR
Apple Inc.
DRAWING NUMBER
051-04039
SIZE
D
REVISION
2.0.0
BRANCH
PAGE
33 OF 145
SHEET
30 OF 85
NOTICE OF PROPRIETARY PROPERTY:
THE INFORMATION CONTAINED HEREIN IS THE PROPRIETARY PROPERTY OF APPLE INC.
THE POSSESSOR AGREES TO THE FOLLOWING:
I TO MAINTAIN THIS DOCUMENT IN CONFIDENCE
II NOT TO REPRODUCE OR COPY IT
III NOT TO REVEAL OR PUBLISH IT IN WHOLE OR PART
IV ALL RIGHTS RESERVED
苹果最新图纸

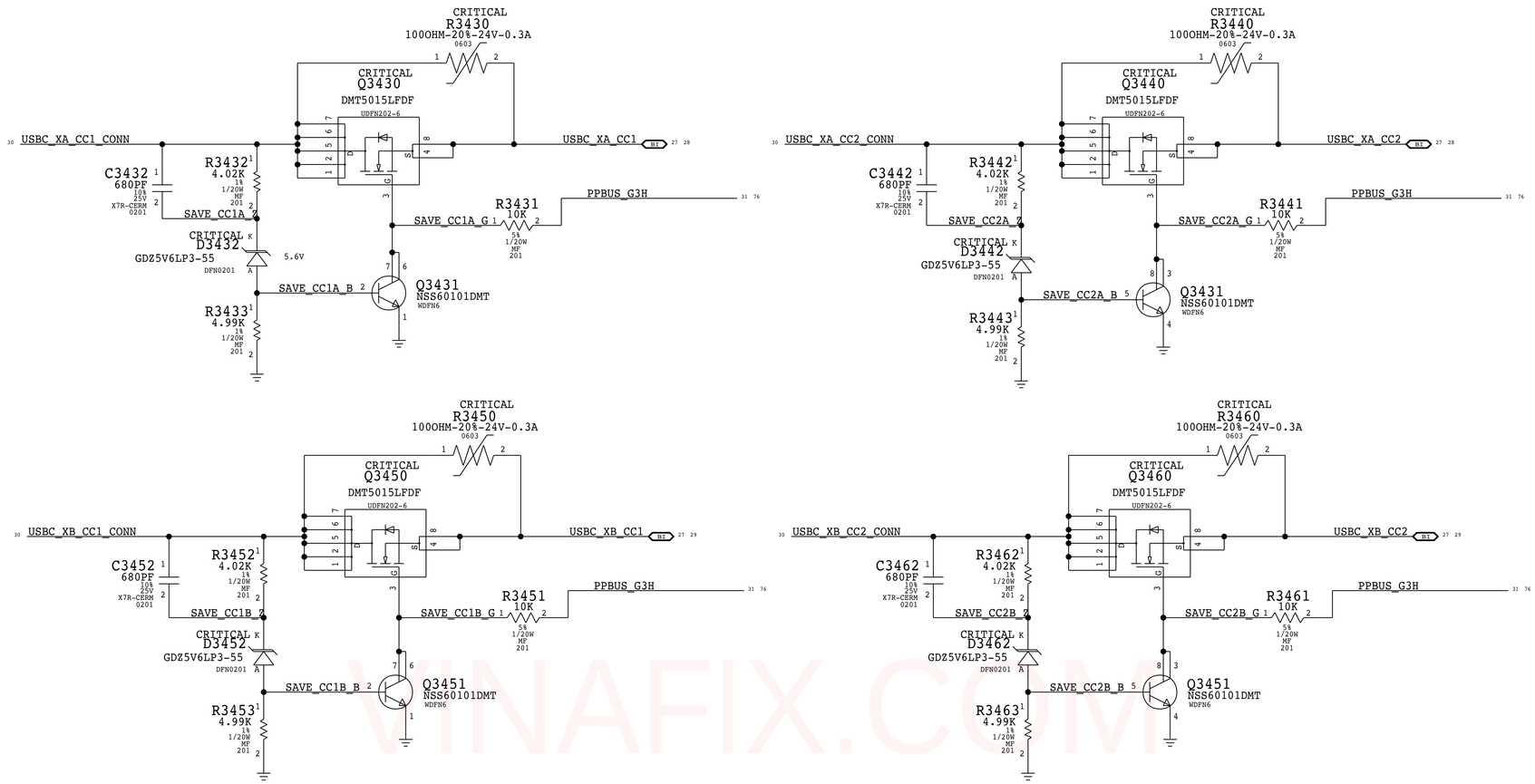

VINAFIX.COM

苹果最新图纸

BOM_COST_GROUP=USB-C

DESIGN: X1032/MLB
LAST CHANGE: Fri Sep 15 15:09:18 2017

PAGE TITLE
USB-C SUPPORT 2

Apple Inc.

DRAWING NUMBER 051-04039
SIZE D
REVISION 2.0.0
BRANCH
PAGE 34 OF 145
SHEET 31 OF 85

NOTICE OF PROPRIETARY PROPERTY:
THE INFORMATION CONTAINED HEREIN IS THE PROPRIETARY PROPERTY OF APPLE INC.
THE POSESSOR AGREES TO THE FOLLOWING:
I TO MAINTAIN THIS DOCUMENT IN CONFIDENCE
II NOT TO REPRODUCE OR COPY IT
III NOT TO REVEAL OR PUBLISH IT IN WHOLE OR PART
IV ALL RIGHTS RESERVED

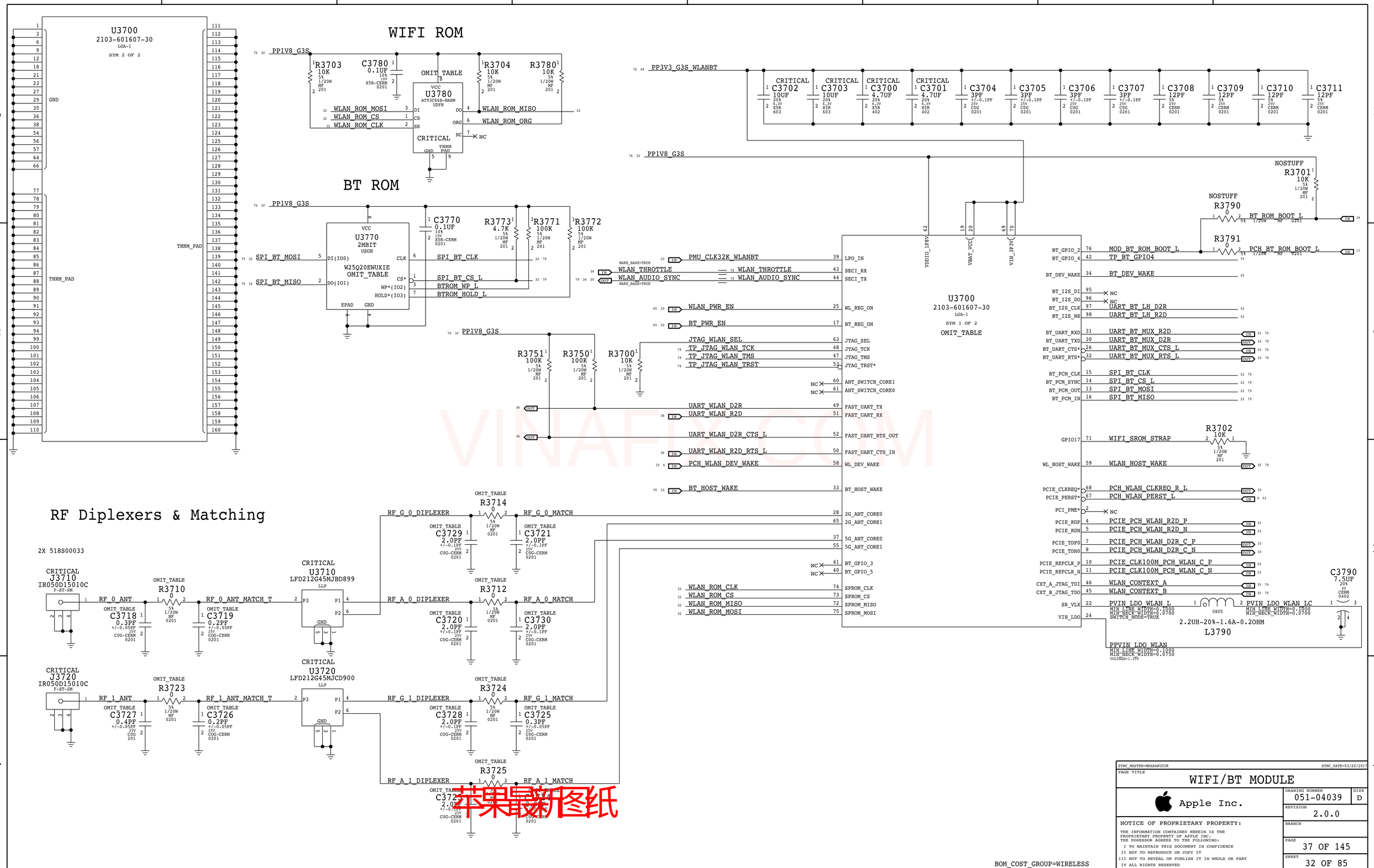

VINAFIX.COM
苹果最新图纸

Software	I2S_SEL	UART_SEL	I2S I/F	UART I/F
Gen1 (macOS)	0	1	UART (PCH)	UART (PCH)
Gen1 (Bootcamp)	1	1	I2S (PCH)	UART (PCH)
Gen2	X	0	X	UART (SOC)

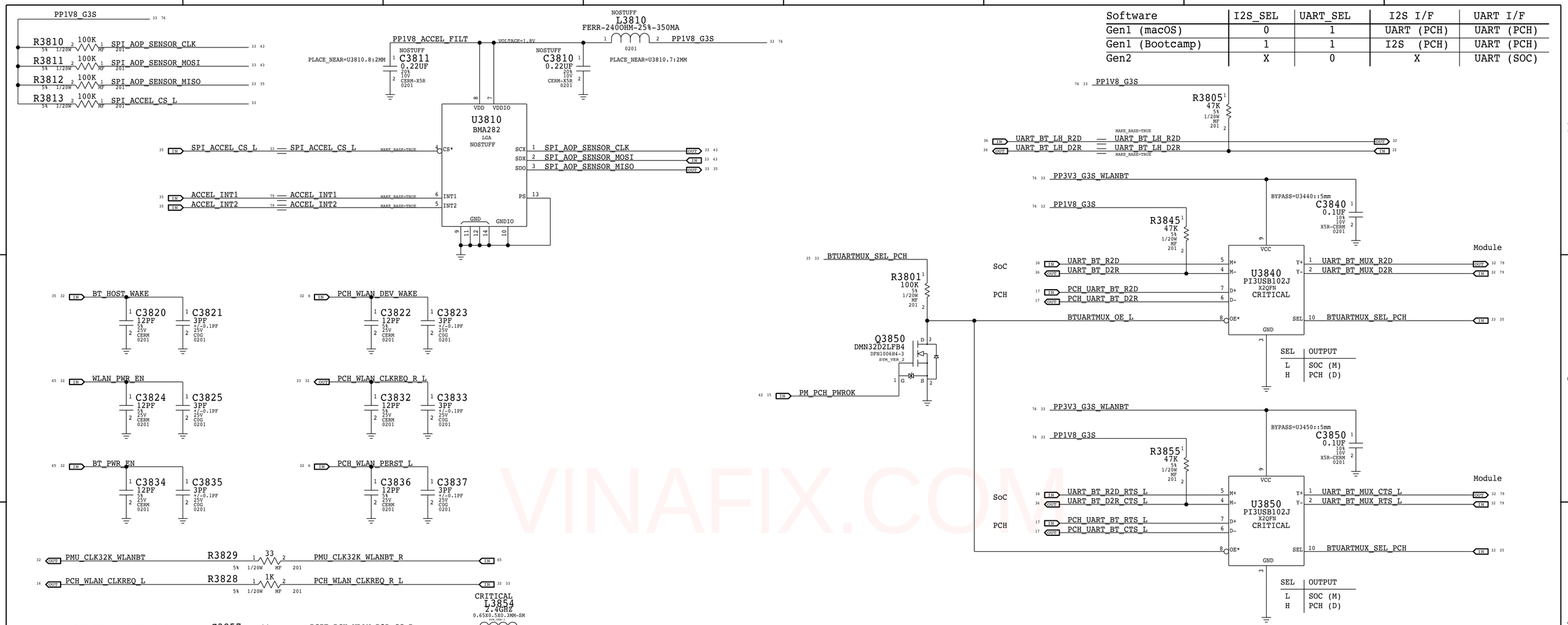

PART#	QTY	DESCRIPTION	REFERENCE DESIGNATOR(S)	CRITICAL	BOM OPTION
152S2053	1	IND,FILM,4.7NH,+/-3%,400MA,UM-Q,0201	C3719	CRITICAL	
131S0428	1	CAP,CER,10PF,5%,25V,C0H,0201,HQ	R3710	CRITICAL	
152S2021	1	IND,FILM,1.5NH,+/-0.1NH,1000MA,UM-Q,0201	R3714	CRITICAL	
152S00157	1	IND,FILM,1.2NH,+/-0.05NH,1.1A,UM-Q,0201	R3712	CRITICAL	
152S2053	1	IND,FILM,4.7NH,+/-3%,400MA,UM-Q,0201	C3726	CRITICAL	
131S0428	1	CAP,CER,10PF,5%,25V,C0H,0201,HQ	R3723	CRITICAL	
152S2021	1	IND,FILM,1.5NH,+/-0.1NH,1000MA,UM-Q,0201	R3724	CRITICAL	
152S00157	1	IND,FILM,1.2NH,+/-0.05NH,1.1A,UM-Q,0201	R3725	CRITICAL	

PART#	QTY	DESCRIPTION	REFERENCE DESIGNATOR(S)	CRITICAL	BOM OPTION
131S0431	1	CAP,CER,C0G,0.2PF,+/-0.05PF,25V,0201,H-Q	C3718		RFTUNING:NOSTUFF
131S0319	1	CAP,CER,C0G,2.0PF,+/-0.1PF,25V,0201,H-Q	C3729		RFTUNING:NOSTUFF
131S0319	1	CAP,CER,C0G,2.0PF,+/-0.1PF,25V,0201,H-Q	C3721		RFTUNING:NOSTUFF
131S0319	1	CAP,CER,C0G,2.0PF,+/-0.1PF,25V,0201,H-Q	C3720		RFTUNING:NOSTUFF
131S0319	1	CAP,CER,C0G,2.0PF,+/-0.1PF,25V,0201,H-Q	C3730		RFTUNING:NOSTUFF
131S0431	1	CAP,CER,C0G,0.2PF,+/-0.05PF,25V,0201,H-Q	C3722		RFTUNING:NOSTUFF
131S0319	1	CAP,CER,C0G,2.0PF,+/-0.1PF,25V,0201,H-Q	C3728		RFTUNING:NOSTUFF
131S0319	1	CAP,CER,C0G,2.0PF,+/-0.1PF,25V,0201,H-Q	C3725		RFTUNING:NOSTUFF
131S0319	1	CAP,CER,C0G,2.0PF,+/-0.1PF,25V,0201,H-Q	C3723		RFTUNING:NOSTUFF
131S0319	1	CAP,CER,C0G,2.0PF,+/-0.1PF,25V,0201,H-Q	C3724		RFTUNING:NOSTUFF

BOM_COST_GROUP=WIRELESS

VINAFIX.COM
苹果最新图纸

PAGE TITLE
WIFI/BT Module Support

Apple Inc.

DRAWING NUMBER 051-04039 SIZE D
REVISION 2.0.0
BRANCH
PAGE 38 OF 145
SHEET 33 OF 85

NOTICE OF PROPRIETARY PROPERTY:
THE INFORMATION CONTAINED HEREIN IS THE PROPRIETARY PROPERTY OF APPLE INC.
THE POSESSOR AGREES TO THE FOLLOWING:
I TO MAINTAIN THIS DOCUMENT IN CONFIDENCE
II NOT TO REPRODUCE OR COPY IT
III NOT TO REVEAL OR PUBLISH IT IN WHOLE OR PART
IV ALL RIGHTS RESERVED

Note 1) IPU represents SW configured state, not HW default

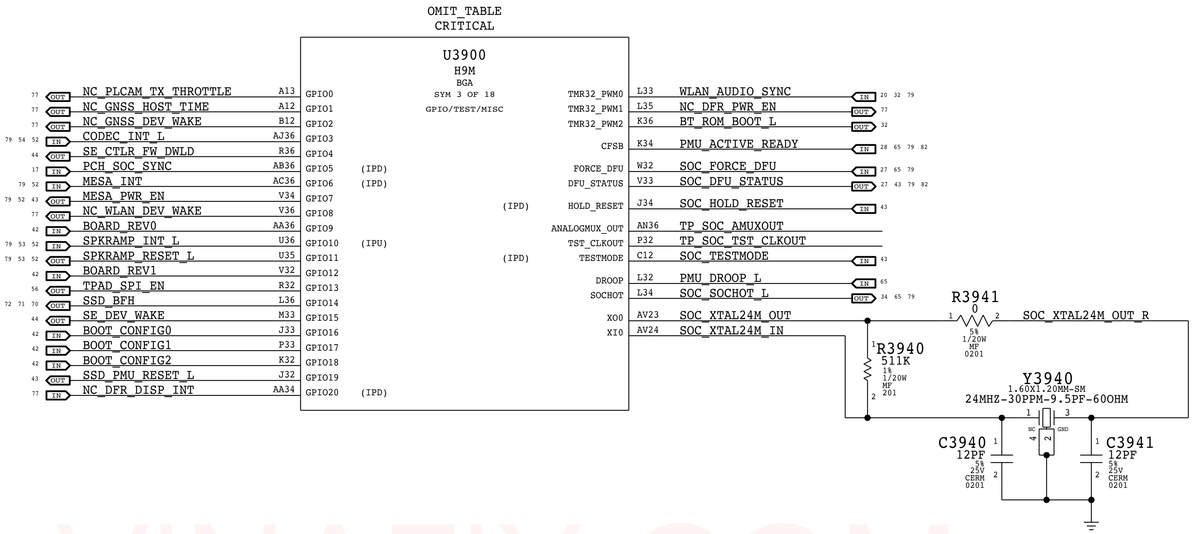

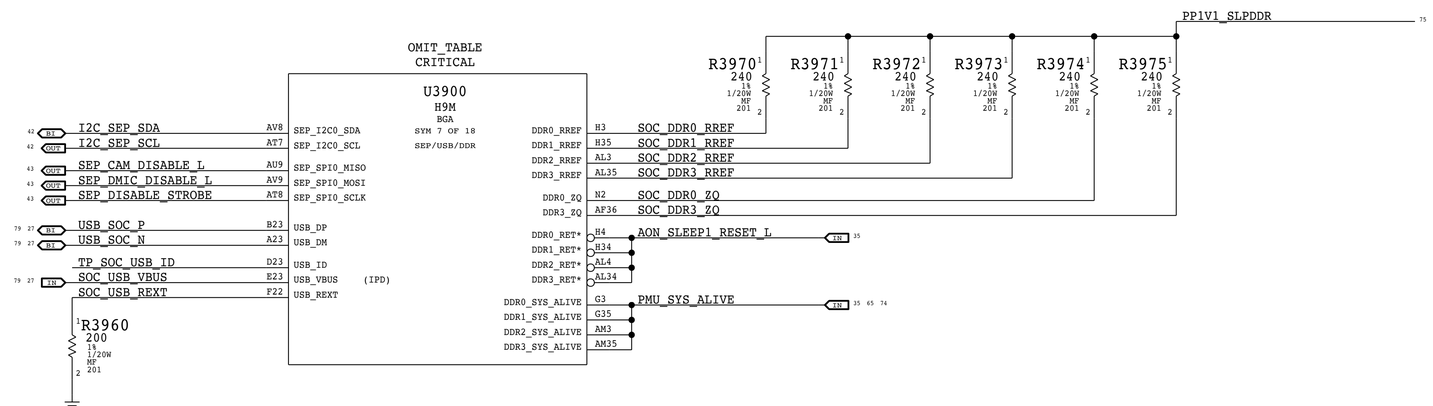

VINAFIX.COM

苹果最新图纸

PP1V8_SLPS2R — R3939 47K 5% 1/20W MF 201 — SOC_SOCHOT_L

BOM_COST_GROUP=T290

SYNC_MASTER=X589_BIGSUR SYNC_DATE=03/15/2017

PAGE TITLE: SoC GPIO/SEP/USB/DDR/Test

Apple Inc.

DRAWING NUMBER: 051-04039 SIZE: D

REVISION: 2.0.0

BRANCH

PAGE: 39 OF 145

SHEET: 34 OF 85

NOTICE OF PROPRIETARY PROPERTY:
THE INFORMATION CONTAINED HEREIN IS THE PROPRIETARY PROPERTY OF APPLE INC.
THE POSESSOR AGREES TO THE FOLLOWING:
I TO MAINTAIN THIS DOCUMENT IN CONFIDENCE
II NOT TO REPRODUCE OR COPY IT
III NOT TO REVEAL OR PUBLISH IT IN WHOLE OR PART
IV ALL RIGHTS RESERVED

OMIT_TABLE
CRITICAL

U3900
H9M
BGA
SYM 6 OF 18
AOP

WLAN_CONTEXT_A	D3	AOP_FUNC[0]		AOP_PDM_CLK0	P6	PDM_DMIC_CLK0_R	43
WLAN_CONTEXT_B	F4	AOP_FUNC[1]		AOP_PDM_CLK1	K2	PDM_DMIC_CLK1_R	43
ACCEL_INT1	M6	AOP_FUNC[2]	(IPD)	AOP_PDM_CLK2 (IPU)	J6	TP_SMC_FIXTURE_MODE_L	79
ACCEL_INT2	D4	AOP_FUNC[3]	(IPD)	AOP_PDM_CLK3 (IPU)	L6	NC_PLCAM_PROX_INT_L	77
BTUARTMUX_SEL_PCH	F3	AOP_FUNC[4]		AOP_PDM_CLK4 (IPU)	L5	NC_PLCAM_ROMEO_B2B_DETECT	77
SOC_PERST_L	K6	AOP_FUNC[5]			J5	PDM_DMIC_DATA0	54
NC_ALTIMETER_INT	E4	AOP_FUNC[6]	(IPD)	AOP_PDM_DATA0 (IPD)	K4	PDM_DMIC_DATA1	54
SPI_ACCEL_CS_L	J3	AOP_FUNC[7]		AOP_PDM_DATA1 (IPD)			
NC_SPI_ALTIMETER_CS_L	H6	AOP_FUNC[8]			D2	SPI_AOP_SENSOR_MOSI_R	43
				AOP_SPI_MOSI	F2	SPI_AOP_SENSOR_CLK_R	43
NC_I2C_AOP_SCL	N6	AOP_I2C0_SCL		AOP_SPI_SCLK	E2	SPI_AOP_SENSOR_MISO	33
NC_I2C_AOP_SDA	G5	AOP_I2C0_SDA		AOP_SPI_MISO			

OMIT_TABLE
CRITICAL

U3900
H9M
BGA
SYM 5 OF 18
AON

NC_DFR_TOUCH_INT_L	AL6	AON_GPIO0		JTAG_TCK (IPU)	AK6	DBGMUX_SWD_SOC_CLK	20 79
CPU_SMC_THRMTRIP_L	AE6	AON_GPIO1		JTAG_TMS (IPU)	AN5	DBGMUX_SWD_SOC_IO	20 79
NC_SMC_GFX_SELF_THROTTLE	AT5	AON_GPIO2	(IPD)	JTAG_TDI (IPU)	AH6	TP_JTAG_SOC_TDI	79
NC_SMC_TOPBLK_SWP_L	AN4	AON_GPIO3		JTAG_TDO	AP4	TP_JTAG_SOC_TDO	79
XDP_PRESENT_L	AK4	AON_GPIO4		JTAG_TRST* (IPD)	AJ6	TP_JTAG_SOC_TRST_L	
CODEC_RESET_L	AV5	AON_GPIO5		JTAG_SEL	AC6	SOC_JTAG_SEL (DAP=0, TAP=1)	35
BT_DEV_WAKE	AR3	AON_GPIO6					
NC_PCIEDN_WAKE_L	AG6	AON_GPIO7	(IPU)	DOCK_CONNECT	AN2	SOC_DOCK_CONNECT	28 29 35 79
NC_ENET_LOW_PWR	AU5	AON_GPIO8		AON_SWD0_TMS	AJ4	TP_SWD_WLAN_SWDIO	77
TPAD_SPI_INT_L	AP2	AON_GPIO9		(IPU) AON_SWD1_TMS	AH4	NC_MESA_MENUKEY_L	77
NC_SDCONN_STATE_CHANGE_L	AR4	AON_GPIO10	(IPU)	AON_SWD01_TCK	AJ2	TP_SWD_WLAN_SWCLK	77
NC_ENET_MEDIA_SENSE	AN3	AON_GPIO11	(IPD)	WDOG	AJ5	SOC_WDOG	65
PMU_INT_L	AT6	AON_GPIO12	(IPU)				
				AON_SLEEP1_RESET*	AF6	AON_SLEEP1_RESET_L	34
SPMI_CLK_R	AD6	AON_SPMI_SCLK					
SPMI_DATA_R	AR2	AON_SPMI_SDATA					
PMU_CLK32K_SOC	AR5	RT_CLK32768					
SOC_COLD_RESET_L	AK2	COLD_RESET*					
	AK3	CFSB_AON					
PMU_COLD_RESET_L							

SPMI_CLK — R4036 20 1 2 5% 1/20W MF 201 — PLACE_NEAR=U3900.AD6:5MM
SPMI_DATA — R4037 20 1 2 5% 1/20W MF 201 — PLACE_NEAR=U7800.A7:5MM

R4039 1 2 4.7K 5% 1/20W MF 201

OMIT_TABLE
CRITICAL

U3900
H9M
BGA
SYM 9 OF 18
SMC

PLACE_NEAR=U3900.V2:5MM
PLACE_NEAR=U3900.U3:5MM
PLACE_NEAR=U3900.U4:5MM
PLACE_NEAR=U3900.V8:5MM

ESPI_IO<0> R4050 20	ESPI_IO_R<0>	V2	SMC_ESPI_IO0		SMC_GPIO0	Y4	CODEC_WAKE_L 52 54 79
ESPI_IO<1> R4051 20	ESPI_IO_R<1>	U3	SMC_ESPI_IO1		SMC_GPIO1 (IPD)	Y8	BT_HOST_WAKE 32 33
ESPI_IO<2> R4052 20	ESPI_IO_R<2>	U4	SMC_ESPI_IO2		SMC_GPIO2 (IPD)	Y5	WLAN_HOST_WAKE 32 79
ESPI_IO<3> R4053 20	ESPI_IO_R<3>	V8	SMC_ESPI_IO3		SMC_GPIO3	AA2	NC_SMC_GFX_THROTTLE_L 77
	ESPI_CLK60M	U2	SMC_ESPI_CLK	(IPD)	SMC_GPIO4	Y7	LID_OPEN_RIGHT 43
	ESPI_CS_L	V7	SMC_ESPI_CS*		SMC_GPIO5 (IPD)	Y6	NC_PCC_EVENT 77
	ESPI_RESET_L	V6	SMC_ESPI_RESET*	(IPD)	SMC_GPIO6	AB2	NC_TPAD_VIBE_L 77
					SMC_GPIO7	AD5	TPAD_KBD_WAKE_L 43
	SMC_PECI_RX	M5	SMC_PECI_IN	(IPD)	SMC_GPIO8	AD2	LID_OPEN_LEFT 43
	SMC_PECI_TX	T6	SMC_PECI_OUT		SMC_GPIO9	AB4	NC_SPI_DESCRIPTOR_OVERRIDE_L 77
	SMC_PCH_PWROK	W7	PCH_PWROK		(IPU) SMC_GPIO10	AC2	NC_DISP_GCON_INT_L 77
	SMC_PCH_SYS_PWROK	W8	SYS_PWROK		SMC_GPIO11	AC3	NC_PCH_GCON_INT_L 77
					SMC_GPIO12	AA8	TPAD_ACTUATOR_DISABLE_L 43
	SMC_RSMRST_L	W6	RSMRST*		(IPU) SMC_GPIO13	AB3	TBT_WAKE_L 27
	SMC_SYSRST_L	W4	SYS_RESET*		(IPU) SMC_GPIO14	AE2	UPC_I2C_INT_L 27 45
	PM_SLP_S0_L	AA4	SLP_S0B		(IPD) SMC_GPIO15	L4	NC_GNSS_HOST_WAKE 77
	SMC_PROCHOT_L	R5	PROCHOT*				
	PMU_SYS_ALIVE	AA6	SYS_ALIVE				
	I2C_UPC_SCL	M3	SMC_I2C0_SCL		SMC_ADC0	AG2	SMC_DCIN_VSENSE 43
	I2C_UPC_SDA	J4	SMC_I2C0_SDA		SMC_ADC1	AC4	SMC_DCIN_ISENSE 43
					SMC_ADC2	AH3	SMC_PBUS_VSENSE 43
	NC_I2C_SNS0_S0_SCL	N4	SMC_I2C1_SCL		SMC_ADC3	AD4	SMC_BMON_ISENSE 43
	NC_I2C_SNS0_S0_SDA	P4	SMC_I2C1_SDA		SMC_ADC4	AB6	SMC_CPU_HS_ISENSE 43
					SMC_ADC5	AH2	SMC_3V3G3HMAIN_ISENSE 43
	I2C_SNS1_S0_SCL	U5	SMC_I2C2_SCL		SMC_ADC6	AG4	SMC_5VG3S_ISENSE 43
	I2C_SNS1_S0_SDA	M2	SMC_I2C2_SDA		SMC_ADC7	AC5	SMC_SSD0_ISENSE 43
					REFP_ADC	AF4	PP1V25_SLPS2R_SMC_AVREF 42
	I2C_DISP_SCL	U6	SMC_I2C3_SCL		REFM_ADC	AG3	GND_SMC_AVSS PLACE_NEAR=U3900.AG3:4MM
	I2C_DISP_SDA	R4	SMC_I2C3_SDA				
					SMC_PWM0	J2	SMC_FAN_0_PWM 51
	I2C_PWR_SCL	P3	SMC_I2C4_SCL		SMC_TACH0	L3	SMC_FAN_0_TACH 51
	I2C_PWR_SDA	T4	SMC_I2C4_SDA				
					SMC_PWM1	R6	NC_SMC_FAN_1_PWM 77
	I2C_SNS_G3S_SCL	R2	SMC_I2C5_SCL		SMC_TACH1	L2	NC_SMC_FAN_1_TACH 77
	I2C_SNS_G3S_SDA	P2	SMC_I2C5_SDA				
					SMC_PWM2	M4	NC_SMC_LED_ONEWIRE 77
	NC_I2C_SSD0_SCL	R3	SMC_I2C6_SCL		(IPU) SMC_UART0_RXD	V4	TP_SMC_DEBUGPRT_RX 79
	NC_I2C_SSD0_SDA	T2	SMC_I2C6_SDA		SMC_UART0_TXD	V5	TP_SMC_DEBUGPRT_TX 79
					SWD_OUT0_TCK	AE3	SSD0_SWCLK_UART_R2D 70 71 72
					SWD_OUT0_TMS	AA5	SSD0_SWDIO_UART_D2R 70 71 72
					SWD_OUT1_TCK	AF2	NC_SSD1_SWCLK_UART_R2D 77
					SWD_OUT1_TMS	AA7	NC_SSD1_SWDIO_UART_D2R 77

XW4089
SM
1 2
PLACE_NEAR=U3900.AG3:4MM

PP1V8_S5 75

R4054	100K	ESPI_IO<0>	14 35
R4055	100K	ESPI_IO<1>	14 35
R4056	100K	ESPI_IO<2>	14 35
R4057	100K	ESPI_IO<3>	14 35
R4059	100K	ESPI_CS_L	14 35
R4046	10K	SOC_JTAG_SEL	35
R4047	100K	SOC_DOCK_CONNECT	28 29 35 79

1 2 5% 1/20W MF 201

VINAFIX.COM

苹果最新图纸

BOM_COST_GROUP=T290

SYNC_MASTER=X589_BIGSUR SYNC_DATE=03/16/2017

PAGE TITLE
SoC AOP/AON/SMC

Apple Inc.

DRAWING NUMBER 051-04039
SIZE D
REVISION 2.0.0
BRANCH
PAGE 40 OF 145
SHEET 35 OF 85

NOTICE OF PROPRIETARY PROPERTY:
THE INFORMATION CONTAINED HEREIN IS THE PROPRIETARY PROPERTY OF APPLE INC.
THE POSESSOR AGREES TO THE FOLLOWING:
I TO MAINTAIN THIS DOCUMENT IN CONFIDENCE
II NOT TO REPRODUCE OR COPY IT
III NOT TO REVEAL OR PUBLISH IT IN WHOLE OR PART
IV ALL RIGHTS RESERVED

OMIT_TABLE
CRITICAL

U3900
H9M
BGA
SYM 4 OF 18
ISP

69 IN	MIPI_FTCAM_DATA_P<0>	B27	MIPI0C_DATA0_P		ISP_I2C0_SDA	AF32	I2C_FTCAM_SDA	BI 46
69 IN	MIPI_FTCAM_DATA_N<0>	A27	MIPI0C_DATA0_N		ISP_I2C0_SCL	AH36	I2C_FTCAM_SCL	OUT 46
77 IN	GND	B25	MIPI0C_DATA1_P		ISP_I2C1_SDA	AB32	NC_I2C_PLCAM_SDA	BI 46
77 IN	GND	A25	MIPI0C_DATA1_N		ISP_I2C1_SCL	AG32	NC_I2C_PLCAM_SCL	OUT 46
69 IN	MIPI_FTCAM_CLK_P	B26	MIPI0C_CLK_P		SENSOR0_CLK	AK35	NC_FTCAM_CLK12M_R	OUT 77
69 IN	MIPI_FTCAM_CLK_N	A26	MIPI0C_CLK_N		SENSOR0_RST	AK34	NC_FTCAM_RESET_L	OUT 77
77 IN	GND	B28	MIPI1C_DATA0_P		SENSOR0_ISTRB	AJ33	NC_DFR_TOUCH_RESET_L	OUT 77
77 IN	GND	A28	MIPI1C_DATA0_N		SENSOR1_CLK	AD33	NC_PLCAM_RX_CLK12M_R	OUT 77
77 IN	GND	B30	MIPI1C_DATA1_P		SENSOR1_RST	AC32	NC_PLCAM_RX_RESET_L	OUT 77
77 IN	GND	A30	MIPI1C_DATA1_N		SENSOR1_ISTRB	AC34	NC_DFR_DISP_RESET_L	OUT 77
77 IN	GND	B29	MIPI1C_CLK_P		SENSOR2_CLK	AD32	NC_PLCAM_TX_CLK12M_R	OUT 77
77 IN	GND	A29	MIPI1C_CLK_N		SENSOR2_RST	AJ32	NC_PLCAM_TX_RESET_L	OUT 77
77 OUT	NC_MIPI_DFR_DATAP	B33	MIPID_DATA0_P	(IPD)	SENSOR_INT	AA33	NC_PLCAM_TX_INT	IN 77
77 OUT	NC_MIPI_DFR_DATAN	A33	MIPID_DATA0_N					
77 OUT	NC_MIPI_DFR_CLKP	B32	MIPID_CLK_P	(IPD)	DISP_TE	H32	NC_DFR_DISP_TE	IN 77
77 OUT	NC_MIPI_DFR_CLKN	A32	MIPID_CLK_N		DISP_VSYNC	T36	BOARD_REV2	IN 42
	SOC_MIPI0C_REXT	F23	MIPI0C_REXT		CLK32K_OUT	AK33	NC_DFR_TOUCH_CLK32K_RESET_L	OUT 77
	SOC_MIPI1C_REXT	F26	MIPI1C_REXT					
	SOC_MIPID_REXT	F27	MIPID_REXT					

1 R4100 4.02K 1% 1/20W MF 201 2
1 R4101 4.02K 1% 1/20W MF 201 2
1 R4102 4.02K 1% 1/20W MF 201 2

OMIT_TABLE
CRITICAL

U3900
H9M
BGA
SYM 2 OF 18
I2C/UART/SPI/I2S

46 BI	I2C_SPKRAMP_L_SDA	AE35	I2C0_SDA		SPI0_MISO	AR9	SPI_SOCROM_MISO	IN 42 43
46 OUT	I2C_SPKRAMP_L_SCL	AD35	I2C0_SCL		SPI0_MOSI	AR7	SPI_SOCROM_MOSI_R
79 46 BI	I2C_SPKRAMP_R_SDA	AF34	I2C1_SDA		SPI0_SCLK	AU7	SPI_SOCROM_CLK_R
79 46 OUT	I2C_SPKRAMP_R_SCL	AG35	I2C1_SCL		SPI0_SSIN	AT9	SPI_SOCROM_CS_L	OUT 42
46 BI	TP_I2C_CODEC_SDA	M34	I2C2_SDA	(IPU)	SPI1_MISO	P36	SPI_TPAD_MISO	IN 42 56
46 OUT	TP_I2C_CODEC_SCL	R33	I2C2_SCL		SPI1_MOSI	N34	SPI_TPAD_MOSI_R	OUT 43
46 BI	I2C_ALS_SDA	Y32	I2C3_SDA		SPI1_SCLK	P35	SPI_TPAD_CLK_R	OUT 43
46 OUT	I2C_ALS_SCL	AE34	I2C3_SCL		SPI1_SSIN	T32	SPI_TPAD_CS_L	OUT 56
46 BI	NC_I2C_DFR_SDA	T34	I2C4_SDA		SPI2_MISO	A19	SPI_MESA_MISO	IN 52 79
46 OUT	NC_I2C_DFR_SCL	U32	I2C4_SCL		SPI2_MOSI	A20	SPI_MESA_MOSI_R	OUT 43
46 BI	NC_I2C_SOC_5_SDA	R35	I2C5_SDA		SPI2_SCLK	C19	SPI_MESA_CLK_R	OUT 43
46 OUT	NC_I2C_SOC_5_SCL	U33	I2C5_SCL		SPI2_SSIN	A18	WLAN_THROTTLE	OUT 32
79 54 52 IN	SPKR_ID1	P34	I2C6_SDA	(IPU)	SPI3_MISO	C17	NC_SPI_DFR_MISO	IN 77
79 54 IN	SPKR_ID0	R34	I2C6_SCL	(IPU)	SPI3_MOSI	C18	NC_SPI_DFR_MOSI_R	OUT 77
					SPI3_SCLK	B18	NC_SPI_DFR_CLK_R	OUT 77
					SPI3_SSIN	A17	NC_SPI_DFR_CS_L	OUT 77
79 IN	TP_SOC_DEBUGPRT_RX	Y33	UART0_RXD	(IPU)	(IPD) I2S0_DIN	AC33	I2S_SPKRAMP_L_D2R	IN 52 53 79
79 OUT	TP_SOC_DEBUGPRT_TX	Y34	UART0_TXD		I2S0_DOUT	AG34	I2S_SPKRAMP_L_R2D_R	OUT 43
44 IN	UART_SE_D2R	B15	UART1_RXD		I2S0_BCLK	AA32	I2S_SPKRAMP_L_BCLK_R	OUT 43
44 OUT	UART_SE_R2D	A15	UART1_TXD		I2S0_LRCK	AG33	I2S_SPKRAMP_L_LRCLK	OUT 43
44 IN	UART_SE_D2R_CTS_L	C15	UART1_CTS*		I2S0_MCK	AR35	NC_DFR_TOUCH_RSVD	BI 77
44 OUT	UART_SE_R2D_RTS_L	D15	UART1_RTS*	(IPD)	I2S1_DIN	B20	I2S_SPKRAMP_R_D2R	IN 54
33 IN	UART_BT_D2R	J36	UART2_RXD		I2S1_DOUT	C20	I2S_SPKRAMP_R_R2D_R	OUT 43
33 OUT	UART_BT_R2D	J35	UART2_TXD		I2S1_BCLK	C21	I2S_SPKRAMP_R_BCLK_R	OUT 43
33 IN	UART_BT_D2R_CTS_L	N32	UART2_CTS*		I2S1_LRCK	A21	I2S_SPKRAMP_R_LRCLK	OUT 43
33 OUT	UART_BT_R2D_RTS_L	M32	UART2_RTS*		I2S1_MCK	D21	NC_PCHROM_SW_EN	OUT 77
33 IN	UART_BT_LH_D2R	M36	UART3_RXD	(IPD)	I2S2_DIN	AH34	I2S_CODEC_D2R	IN 52 79
33 OUT	UART_BT_LH_R2D	N36	UART3_TXD		I2S2_DOUT	AB34	I2S_CODEC_R2D_R	OUT 43
77 IN	NC_UART_GNSS_D2R_CTS_L	M35	UART3_CTS*		I2S2_BCLK	AF33	I2S_CODEC_BCLK_R	OUT 43
77 OUT	NC_UART_GNSS_R2D_RTS_L	U34	UART3_RTS*		I2S2_LRCK	AH35	I2S_CODEC_LRCLK	OUT 52 79
32 IN	UART_WLAN_D2R	B14	UART4_RXD		I2S2_MCK	AR33	NC_I2S_CODEC_MCLK	OUT 77
32 OUT	UART_WLAN_R2D	A14	UART4_TXD	(IPD)	I2S3_DIN	AD36	NC_I2S_HAWKING_D2R	IN 77
32 IN	UART_WLAN_D2R_CTS_L	C14	UART4_CTS*		I2S3_DOUT	AB35	NC_I2S_CODEC1_R2D_R	OUT 77
32 OUT	UART_WLAN_R2D_RTS_L	C13	UART4_RTS*		I2S3_BCLK	AE36	NC_I2S_HAWKING_BCLK_R	OUT 77
					I2S3_LRCK	W34	NC_I2S_HAWKING_LRCLK	OUT 77
					I2S3_MCK	AG36	NC_I2S_CODEC1_MCLK	OUT 77

PLACE_NEAR=U3900.AR7:5MM
PLACE_NEAR=U3900.AU7:5MM

R4171 20 1 2 5% 1/20W MF 201 SPI_SOCROM_MOSI OUT 42 43
R4172 20 1 2 5% 1/20W MF 201 SPI_SOCROM_CLK OUT 42 43

苹果最新图纸

BOM_COST_GROUP=T290

SYNC_MASTER=X589_BIGSUR SYNC_DATE=03/15/2017

PAGE TITLE
SoC ISP/I2C/UART/SPI/I2S

Apple Inc.

DRAWING NUMBER 051-04039 SIZE D
REVISION 2.0.0
BRANCH
PAGE 41 OF 145
SHEET 36 OF 85

NOTICE OF PROPRIETARY PROPERTY:
THE INFORMATION CONTAINED HEREIN IS THE PROPRIETARY PROPERTY OF APPLE INC.
THE POSESSOR AGREES TO THE FOLLOWING:
I TO MAINTAIN THIS DOCUMENT IN CONFIDENCE
II NOT TO REPRODUCE OR COPY IT
III NOT TO REVEAL OR PUBLISH IT IN WHOLE OR PART
IV ALL RIGHTS RESERVED

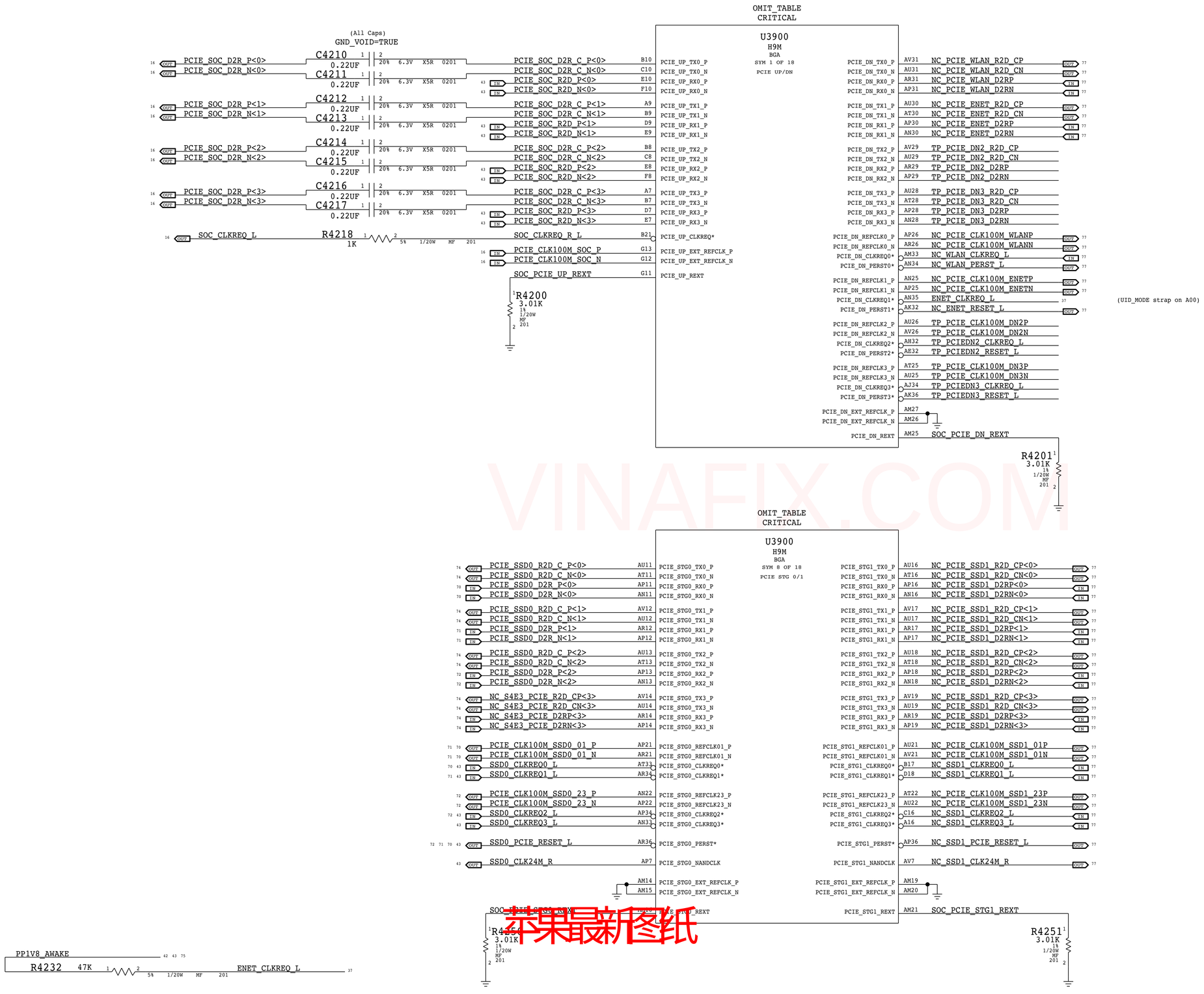

VINAFIX.COM
苹果最新图纸

SYNC_MASTER=X589_BIGSUR SYNC_DATE=03/15/2017

PAGE TITLE

SoC PCIe

Apple Inc.

DRAWING NUMBER 051-04039 SIZE D

REVISION 2.0.0

BRANCH

PAGE 42 OF 145

SHEET 37 OF 85

NOTICE OF PROPRIETARY PROPERTY:
THE INFORMATION CONTAINED HEREIN IS THE PROPRIETARY PROPERTY OF APPLE INC.
THE POSESSOR AGREES TO THE FOLLOWING:
I TO MAINTAIN THIS DOCUMENT IN CONFIDENCE
II NOT TO REPRODUCE OR COPY IT
III NOT TO REVEAL OR PUBLISH IT IN WHOLE OR PART
IV ALL RIGHTS RESERVED

Current estimates @ 105C & 2GB from Gibraltar Power Specification Rev 0.5.3

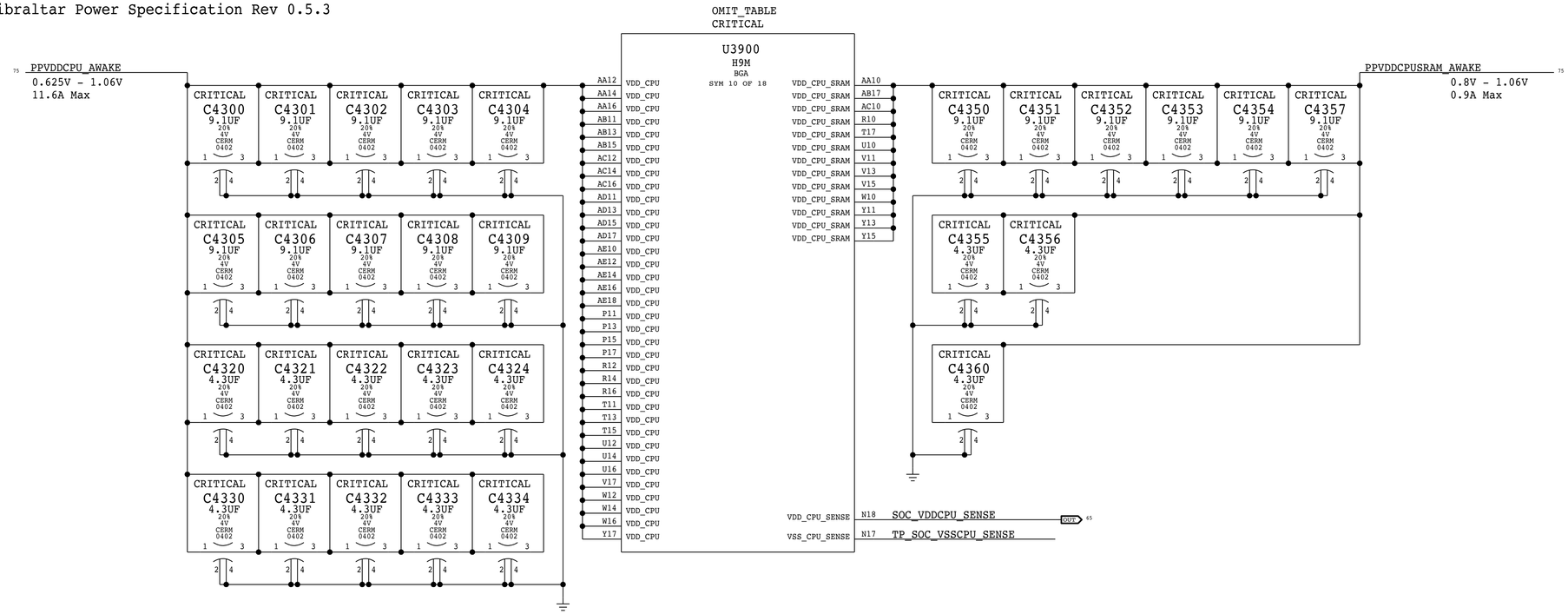

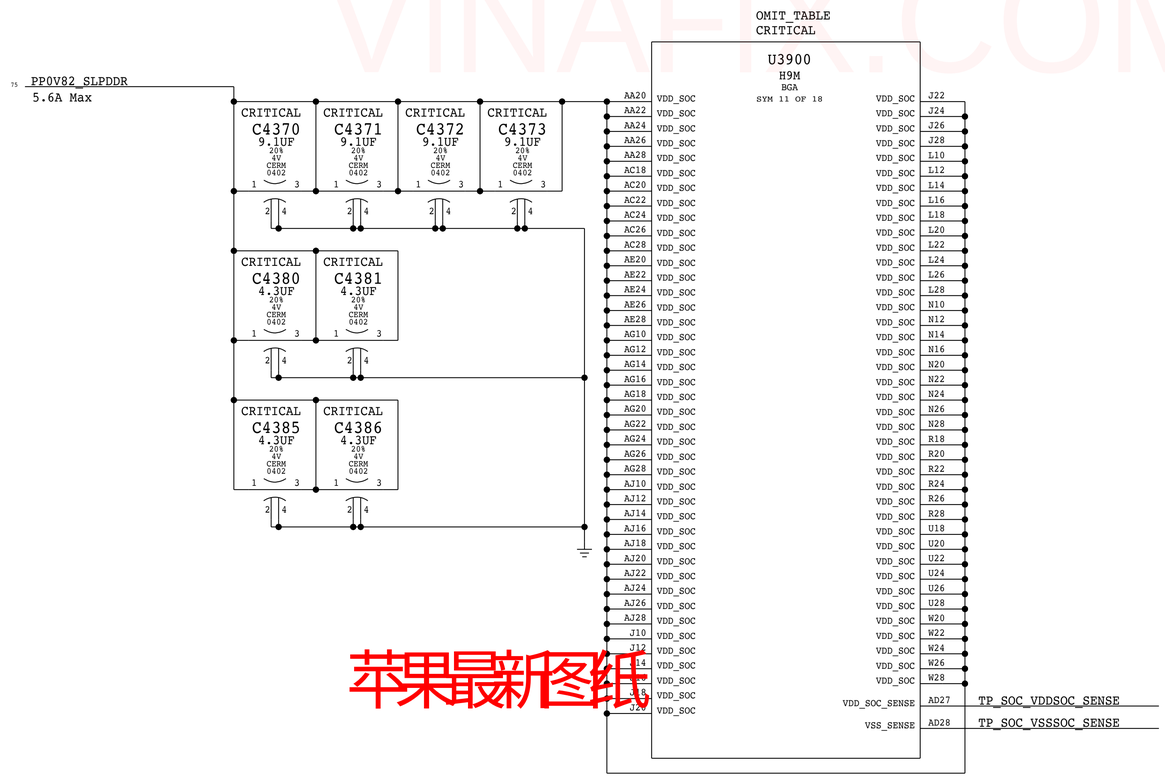

VINAFIX.COM
苹果最新图纸

BOM_COST_GROUP=T290

SYNC_MASTER=X589_BIGSUR SYNC_DATE=02/13/2017

PAGE TITLE
SoC Power 1

Apple Inc.

DRAWING NUMBER 051-04039 SIZE D
REVISION 2.0.0
BRANCH
PAGE 43 OF 145
SHEET 38 OF 85

NOTICE OF PROPRIETARY PROPERTY:
THE INFORMATION CONTAINED HEREIN IS THE PROPRIETARY PROPERTY OF APPLE INC.
THE POSESSOR AGREES TO THE FOLLOWING:
I TO MAINTAIN THIS DOCUMENT IN CONFIDENCE
II NOT TO REPRODUCE OR COPY IT
III NOT TO REVEAL OR PUBLISH IT IN WHOLE OR PART
IV ALL RIGHTS RESERVED

Current estimates @ 105C & 2GB from Gibraltar Power Specification Rev 0.5.3

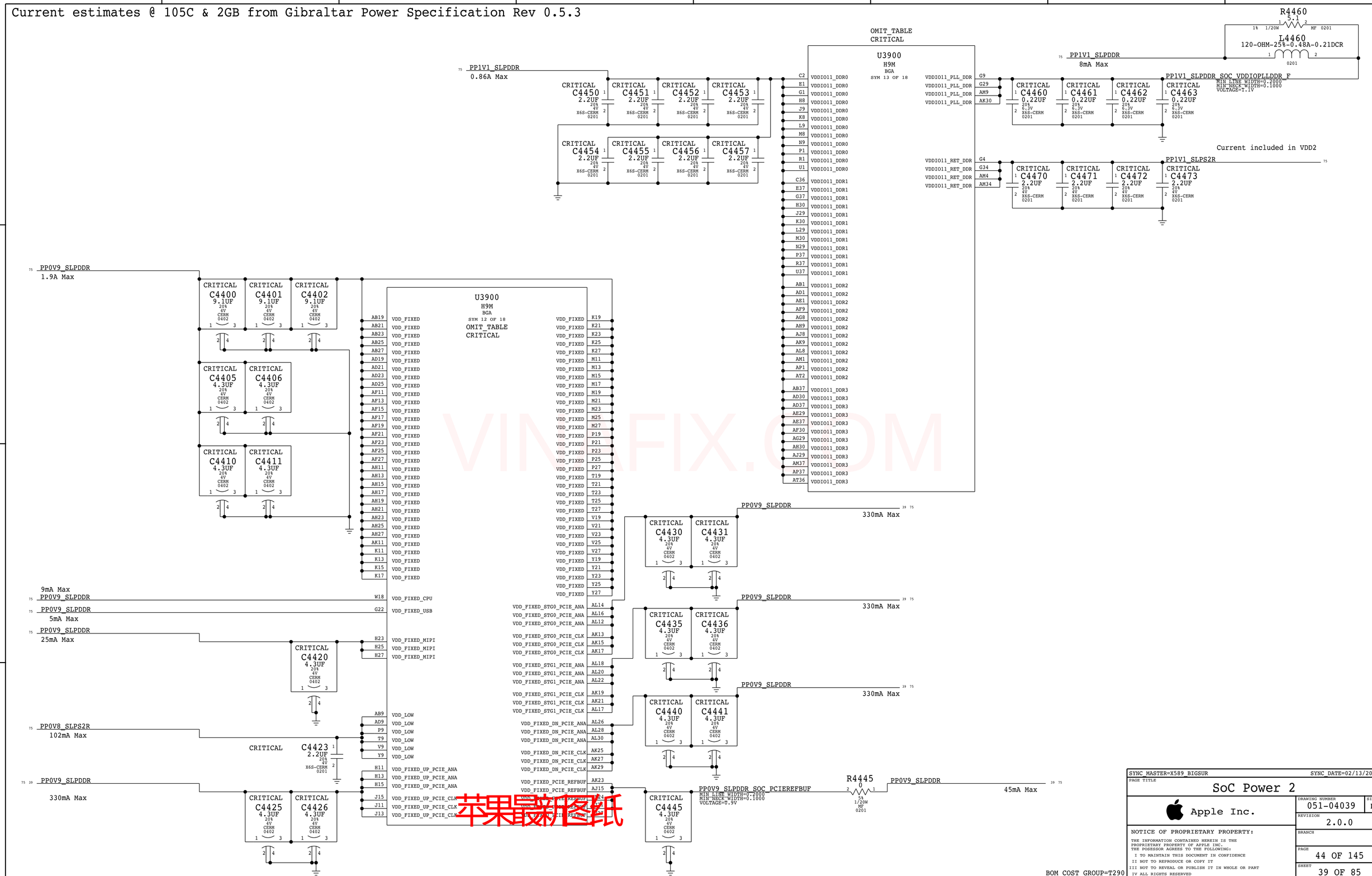

VINAFIX.COM

SYNC_MASTER=X589_BIGSUR SYNC_DATE=02/13/2017

PAGE TITLE
SoC Power 2

Apple Inc.

DRAWING NUMBER 051-04039 SIZE D
REVISION 2.0.0
BRANCH
PAGE 44 OF 145
SHEET 39 OF 85

NOTICE OF PROPRIETARY PROPERTY:
THE INFORMATION CONTAINED HEREIN IS THE PROPRIETARY PROPERTY OF APPLE INC.
THE POSESSOR AGREES TO THE FOLLOWING:
I TO MAINTAIN THIS DOCUMENT IN CONFIDENCE
II NOT TO REPRODUCE OR COPY IT
III NOT TO REVEAL OR PUBLISH IT IN WHOLE OR PART
IV ALL RIGHTS RESERVED

Current estimates @ 105C & 2GB from Gibraltar Power Specification Rev 0.5.3

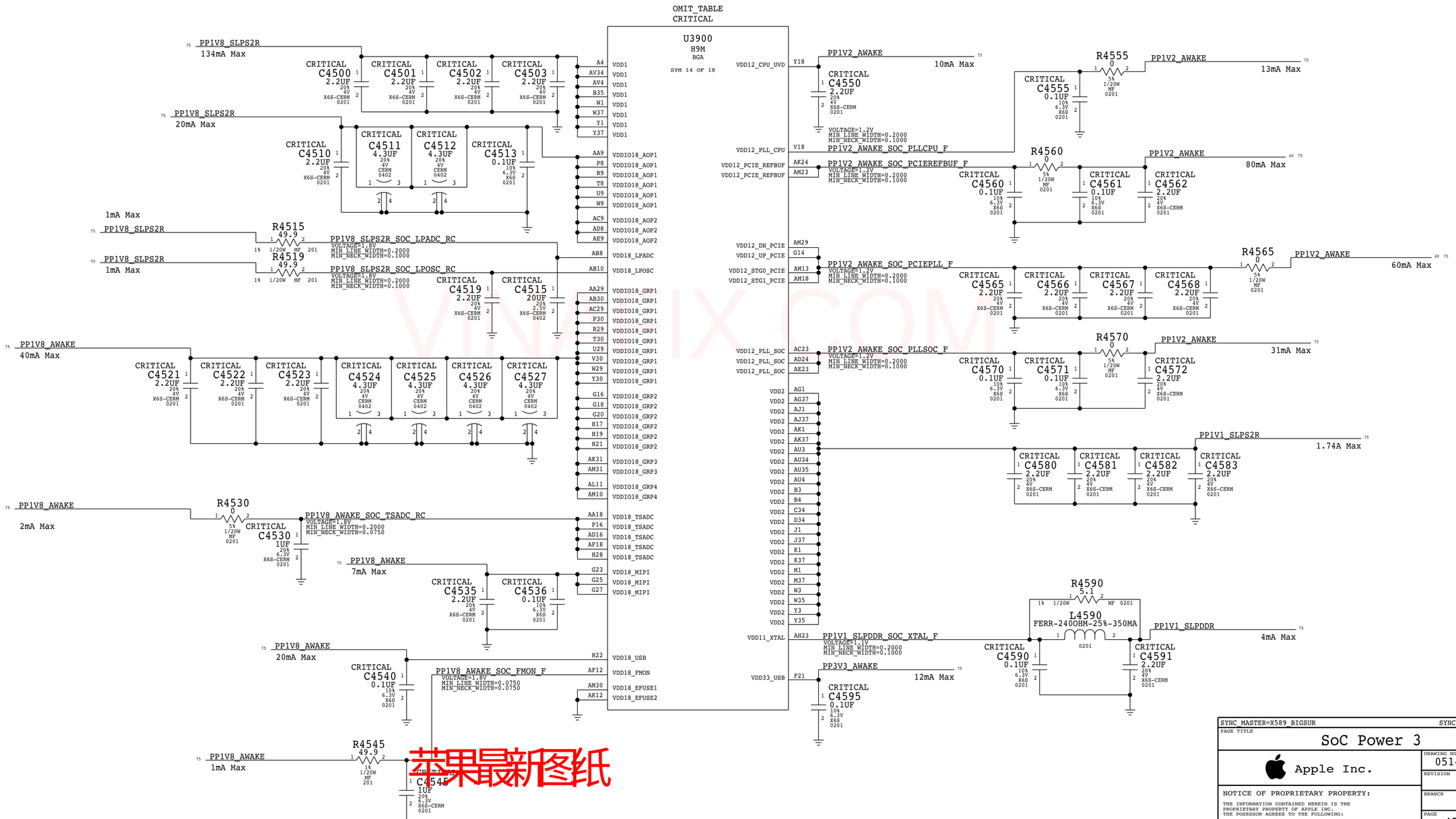

VINAFIX.COM
苹果最新图纸

SYNC_MASTER=X589_BIGSUR SYNC_DATE=02/13/2017

PAGE TITLE
SoC Power 3

Apple Inc.

DRAWING NUMBER 051-04039 SIZE D

REVISION 2.0.0

BRANCH

PAGE 45 OF 145

SHEET 40 OF 85

NOTICE OF PROPRIETARY PROPERTY:
THE INFORMATION CONTAINED HEREIN IS THE PROPRIETARY PROPERTY OF APPLE INC.
THE POSESSOR AGREES TO THE FOLLOWING:
I TO MAINTAIN THIS DOCUMENT IN CONFIDENCE
II NOT TO REPRODUCE OR COPY IT
III NOT TO REVEAL OR PUBLISH IT IN WHOLE OR PART
IV ALL RIGHTS RESERVED

BOM_COST_GROUP=T290

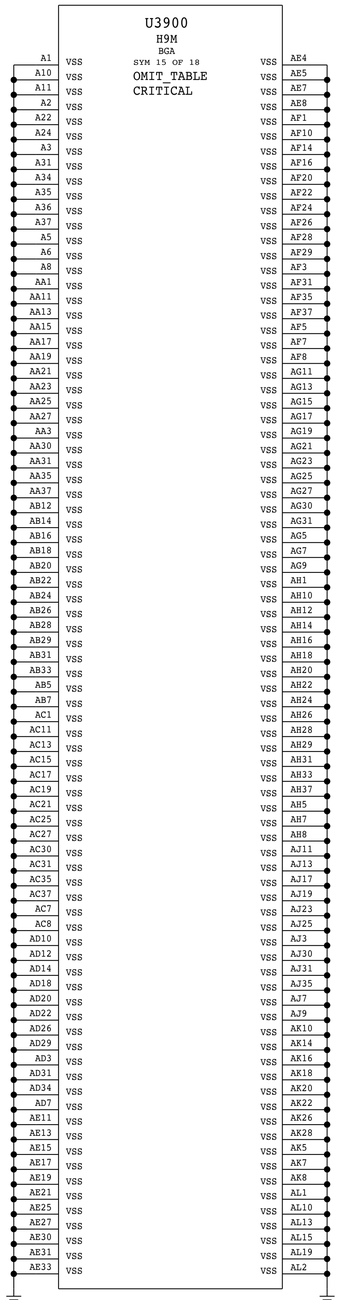

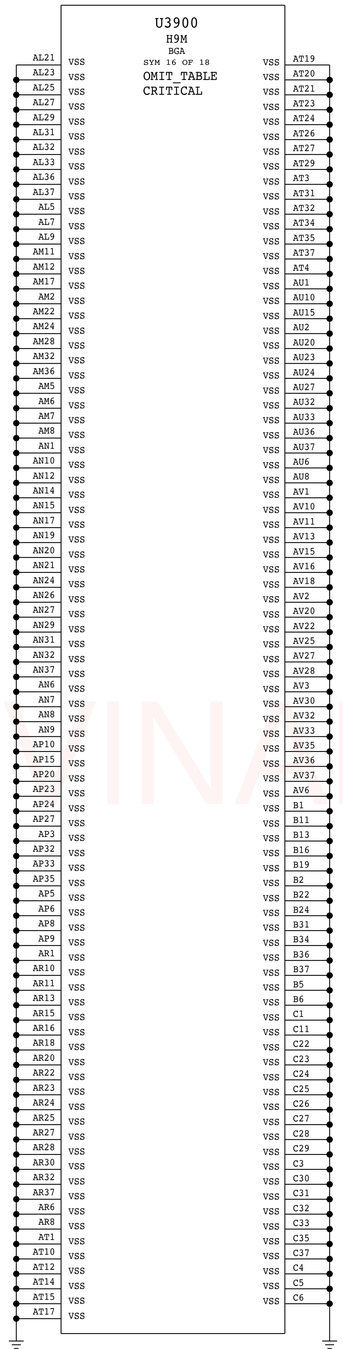

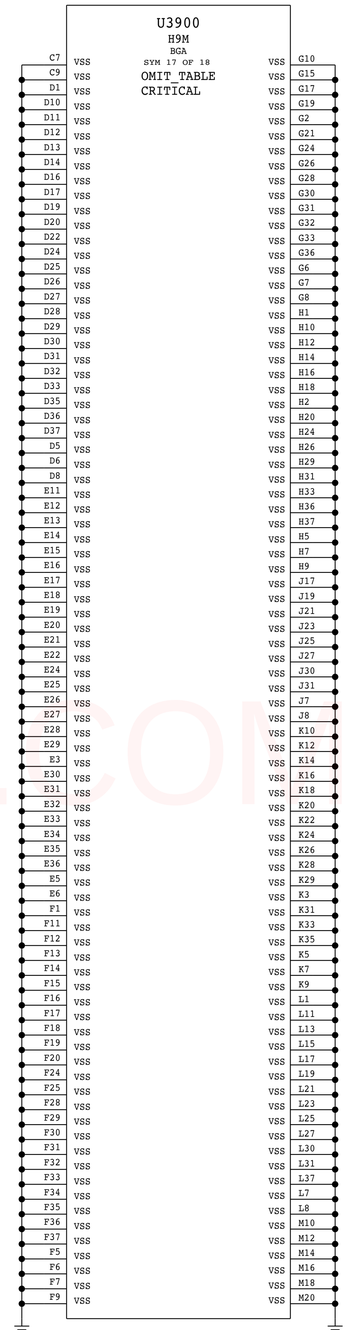

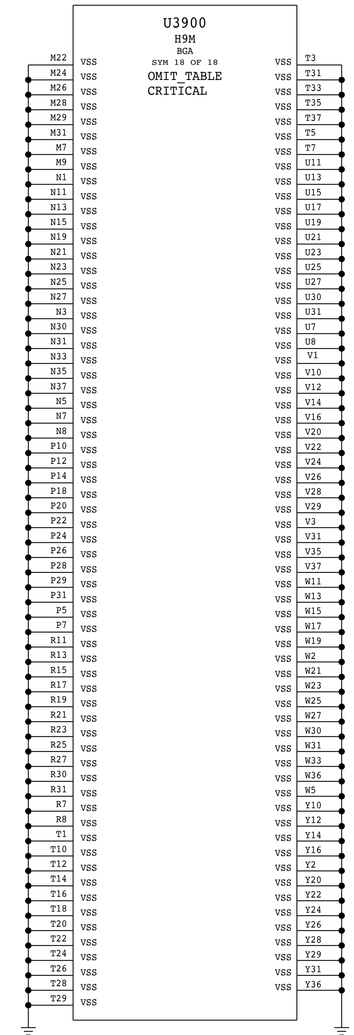

苹果最新图纸

SYNC_MASTER=X589_BIGSUR SYNC_DATE=02/13/2017

PAGE TITLE

SoC Ground

Apple Inc.

DRAWING NUMBER 051-04039 SIZE D

REVISION 2.0.0

BRANCH

PAGE 46 OF 145

SHEET 41 OF 85

NOTICE OF PROPRIETARY PROPERTY:

THE INFORMATION CONTAINED HEREIN IS THE PROPRIETARY PROPERTY OF APPLE INC.
THE POSESSOR AGREES TO THE FOLLOWING:
I TO MAINTAIN THIS DOCUMENT IN CONFIDENCE
II NOT TO REPRODUCE OR COPY IT
III NOT TO REVEAL OR PUBLISH IT IN WHOLE OR PART
IV ALL RIGHTS RESERVED

BOM_COST_GROUP=T290

Boot Config

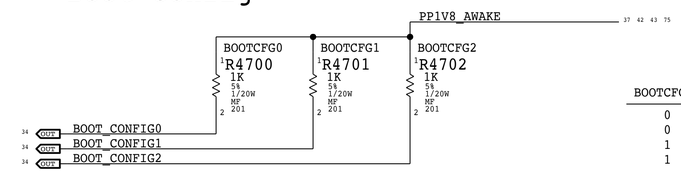

BOOTCFG0	Test Mode
0	Disabled
1	Enabled

BOOTCFG2	BOOTCFG1	Frequency
0	0	40 MHz
0	1	6 MHz
1	0	24 MHz
1	1	Invalid

Board ID

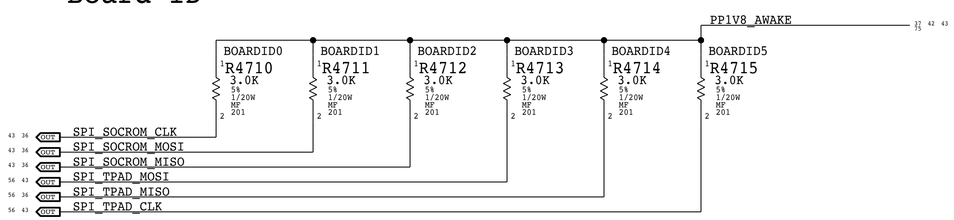

See <rdar://31841051> for J140 assignments

Board Revision

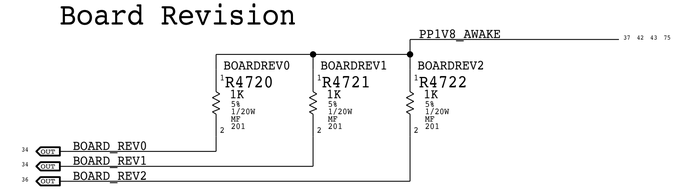

PECI Level Shifting

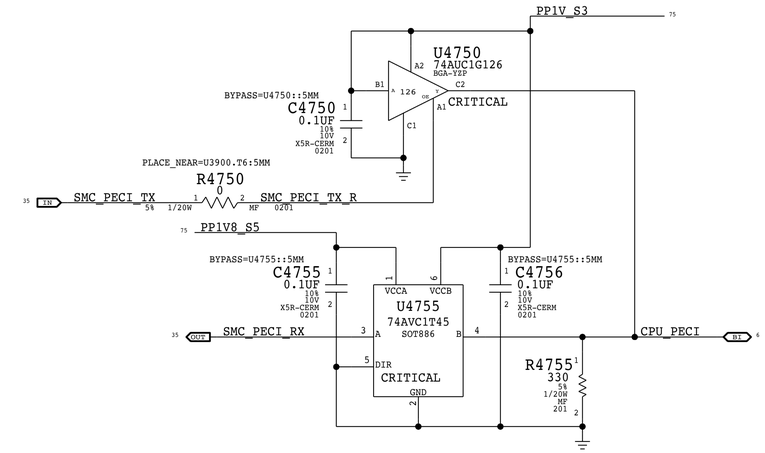

PCH PM Level Shifting

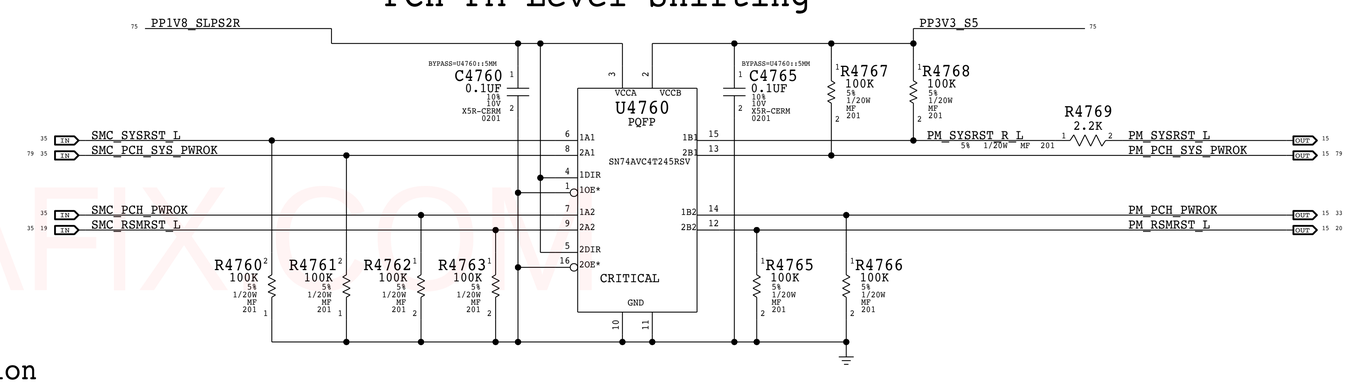

SEP EEPROM

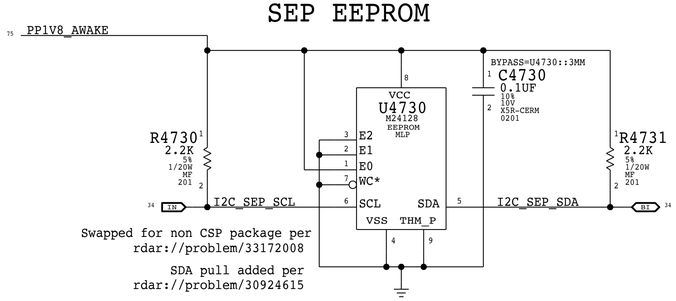

THRMTRIP# Isolation

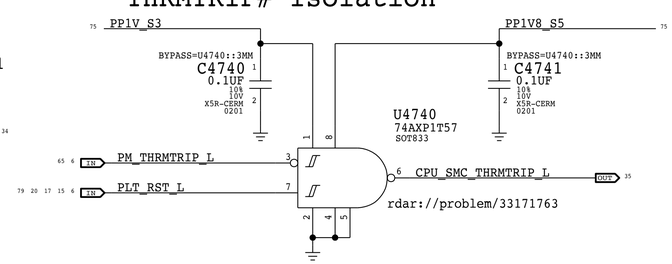

SoC ROM

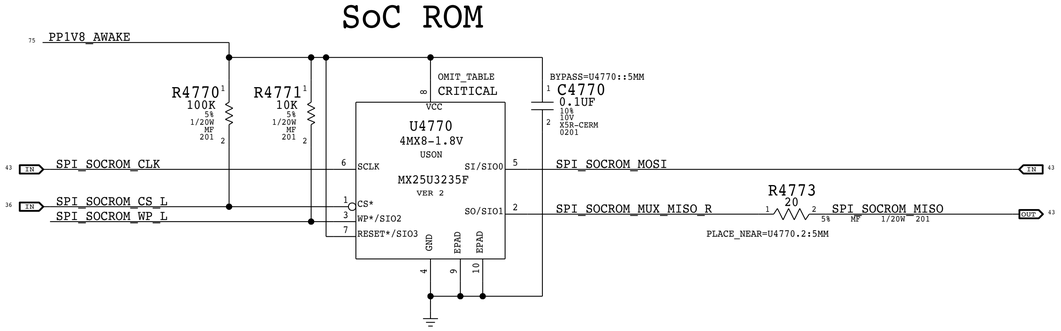

SMC AVREF Supply

Footprint supports 353S01042 alternate

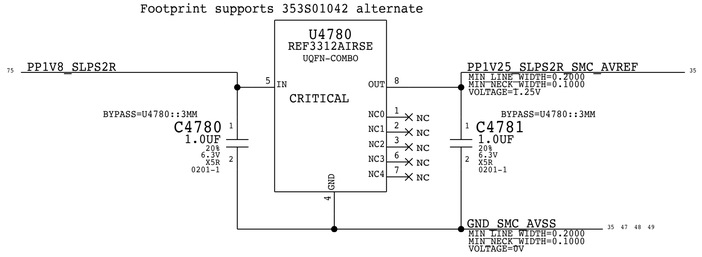

PROCHOT# Level Shifting

rdar://problem/34583713

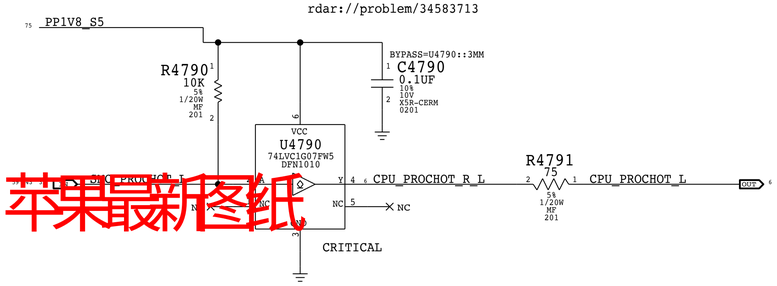

苹果最新图纸

VINAFIX.COM

BOM_COST_GROUP=T290

SYNC_MASTER=X589_BIGSUR SYNC_DATE=03/16/2017

PAGE TITLE: SoC Shared Support

Apple Inc.

DRAWING NUMBER: 051-04039 SIZE: D

REVISION: 2.0.0

BRANCH

PAGE: 47 OF 145

SHEET: 42 OF 85

NOTICE OF PROPRIETARY PROPERTY:
THE INFORMATION CONTAINED HEREIN IS THE PROPRIETARY PROPERTY OF APPLE INC.
THE POSESSOR AGREES TO THE FOLLOWING:
I TO MAINTAIN THIS DOCUMENT IN CONFIDENCE
II NOT TO REPRODUCE OR COPY IT
III NOT TO REVEAL OR PUBLISH IT IN WHOLE OR PART
IV ALL RIGHTS RESERVED

SMC ADC Assignments

47	SMC_DCIN_VSENSE	SMC_DCIN_VSENSE	35
47	SMC_DCIN_ISENSE	SMC_DCIN_ISENSE	35
47	SMC_PBUS_VSENSE	SMC_PBUS_VSENSE	35
47	SMC_BMON_ISENSE	SMC_BMON_ISENSE	35
47	SMC_CPU_HS_ISENSE	SMC_CPU_HS_ISENSE	35
47	SMC_3V3G3HMAIN_ISENSE	SMC_3V3G3HMAIN_ISENSE	35
47	SMC_5VG3S_ISENSE	SMC_5VG3S_ISENSE	35
49	SMC_SSD0_ISENSE	SMC_SSD0_ISENSE	35

MAKE_BASE=TRUE

PCIe Up R2D AC Caps

(All Caps)
GND_VOID=TRUE

16	PCIE_SOC_R2D_C_P<0>	C4820 0.22UF	PCIE_SOC_R2D_P<0>	37
16	PCIE_SOC_R2D_C_N<0>	C4821 0.22UF	PCIE_SOC_R2D_N<0>	37
16	PCIE_SOC_R2D_C_P<1>	C4822 0.22UF	PCIE_SOC_R2D_P<1>	37
16	PCIE_SOC_R2D_C_N<1>	C4823 0.22UF	PCIE_SOC_R2D_N<1>	37
16	PCIE_SOC_R2D_C_P<2>	C4824 0.22UF	PCIE_SOC_R2D_P<2>	37
16	PCIE_SOC_R2D_C_N<2>	C4825 0.22UF	PCIE_SOC_R2D_N<2>	37
16	PCIE_SOC_R2D_C_P<3>	C4826 0.22UF	PCIE_SOC_R2D_P<3>	37
16	PCIE_SOC_R2D_C_N<3>	C4827 0.22UF	PCIE_SOC_R2D_N<3>	37

20% 6.3V X5R 0201

GPIO Source Termination

36	I2S_SPKRAMP_L_R2D_R	R4843	PLACE_NEAR=U3900.AG34:5MM	I2S_SPKRAMP_L_R2D	53
36	I2S_SPKRAMP_L_BCLK_R	R4844	PLACE_NEAR=U3900.AA32:5MM	I2S_SPKRAMP_L_BCLK	53
36	I2S_SPKRAMP_L_LRCLK	R4841	PLACE_NEAR=U3900.AG33:5MM	I2S_SPKRAMP_L_LRCLK_R	53
36	I2S_SPKRAMP_R_R2D_R	R4845	PLACE_NEAR=U3900.C20:5MM	I2S_SPKRAMP_R_R2D	52 79
36	I2S_SPKRAMP_R_BCLK_R	R4846	PLACE_NEAR=U3900.C21:5MM	I2S_SPKRAMP_R_BCLK	52 79
36	I2S_SPKRAMP_R_LRCLK	R4842	PLACE_NEAR=U3900.A21:5MM	I2S_SPKRAMP_R_LRCLK_R	52 79
36	I2S_CODEC_R2D_R	R4847	PLACE_NEAR=U3900.AB34:5MM	I2S_CODEC_R2D	52 79
36	I2S_CODEC_BCLK_R	R4848	PLACE_NEAR=U3900.AF33:5MM	I2S_CODEC_BCLK	52 79
36	SPI_TPAD_MOSI_R	R4851	PLACE_NEAR=U3900.N34:5MM	SPI_TPAD_MOSI	42 56
36	SPI_TPAD_CLK_R	R4852	PLACE_NEAR=U3900.P35:5MM	SPI_TPAD_CLK	42 56
36	SPI_MESA_MOSI_R	R4853	PLACE_NEAR=U3900.A20:5MM	SPI_MESA_MOSI	52 79
36	SPI_MESA_CLK_R	R4854	PLACE_NEAR=U3900.C19:5MM	SPI_MESA_CLK	52 79
37	SSD0_CLK24M_R	R4857	PLACE_NEAR=U3900.AP7:5MM	SSD0_CLK24M	43 70 72
35	PDM_DMIC_CLK0_R	R4859	PLACE_NEAR=U3900.P6:5MM	PDM_DMIC_CLK0	55 79
35	PDM_DMIC_CLK1_R	R4860	PLACE_NEAR=U3900.K2:5MM	PDM_DMIC_CLK1	55 79
35	SPI_AOP_SENSOR_MOSI_R	R4861	PLACE_NEAR=U3900.D2:5MM	SPI_AOP_SENSOR_MOSI	33
35	SPI_AOP_SENSOR_CLK_R	R4862	PLACE_NEAR=U3900.F2:5MM	SPI_AOP_SENSOR_CLK	33

20 1 2 5% 1/20W MF 201

Lid Detect Logic

LID_OPEN_LEFT — LID_OPEN_LEFT (MAKE_BASE=TRUE) — 35

75 55 52 PP1V8_SLPS2R

From Mic Flex

79 55 43 SMC_LID_LEFT — R4804 10K 5% 1/20W MF 201

79 52 43 SMC_LID_RIGHT — R4805 10K 5% 1/20W MF 201

From RIO

R4800 1M 5% 1/20W MF 201

R4801 1M 5% 1/20W MF 201

C4802 0.1UF 10% 6.3V CERM-X5R 0201 (BYPASS=U4802::5MM)

U4802 74LVC1G32 SOT891

IPD_LID_OPEN — 55 79

Clamshell Open = High
Clamshell Closed = Low

NC

LID_OPEN_RIGHT — LID_OPEN_RIGHT (MAKE_BASE=TRUE) — 35

Secure Disable

75 PP1V8_SLPS2R

C4850 0.1UF 10% 6.3V CERM-X5R 0201 (BYPASS=U4850::5MM)

R4850 1K 5% 1/20W MF 201

U4850 SLG4AP41496V STQFN

34	SEP_CAM_DISABLE_L	2 CAM_DIS*	12 CAM_DIS_OUT*	SEP_CAM_DISABLE_OUT_L 49
34	SEP_DMIC_DISABLE_L	3 DMIC_DIS*	7 DMIC_DIS_OUT*	SEP_DMIC_DISABLE_OUT_L 54
34	SEP_DISABLE_STROBE	4 DIS_STROBE	10 CAM_DIS_OUT	NC
65 35	PMU_COLD_RESET_L	9 PMU_COLD_RST*	11 DMIC_DIS_OUT	NC
79 52 43	SMC_LID_RIGHT	13 LID_RIGHT		
79 55 43	SMC_LID_LEFT	14 LID_LEFT	5 RFU	NC
	LID_CTRL_DMIC	6 SEL		

VDD 1 — GND 8

75 43 PP3V3_S5

C4880 0.1UF 10% 6.3V CERM-X5R 0201 (BYPASS=U4880::5MM)

R4880 100K 5% 1/20W MF 201

U4880 SLG4AP41473 STQFN

77 UVP_DIS_L — 2 ENABLE

9 COMP_INPUT

NC 5, NC 8, NC 11 — NC

DUMMY_OUTPU_COMP	3	NC
VREF_1V2	10	PBUS_DIVIDER_REF
CPU_THROTTLE*	12	SMC_PROCHOT_L — 35 42 59
GPU_THROTTLE*	6	NC
THROTTLE*_TEST_OUTPUT	4	NC

VDD 1 — GND 7

C4881 0.1UF 10% 6.3V CERM-X5R 0201

75 43 PP3V3_S5 (BYPASS=U4885::5MM)

C4885 0.1UF 10% 6.3V CERM-X5R 0201

U4885 LMV331 SC70-5

PBUS_DIVIDER_OUT — 4 VCC+ — 5 GND — 1 PBUS_DIVIDER

PPBUS_G3H — 76

R4881 665K 0.1% 1/20W TK 0201

R4882 127K 0.1% 1/20W MF 0201

76 PP1V8_G3S

R4873 100K 5% 1/20W MF 201

79 52 34 MESA_PWR_EN

82 79 34 27 SOC_DFU_STATUS

34 SOC_HOLD_RESET

34 SOC_TESTMODE

R4874 47K 5% 1/20W MF 201

R4877 47K 5% 1/20W MF 201

R4874 47K 5% 1/20W MF 201

PP1V8_SLPS2R — 34 75

PP1V8_AWAKE — 37 42 75

R4883	47K	SSD0_CLKREQ0_L	37 70	
R4884	47K	SSD0_CLKREQ1_L	37 71	
R4887	47K	SSD0_CLKREQ2_L	37 72	
R4888	47K	SSD0_CLKREQ3_L	37	
R4885	100K	SSD0_PCIE_RESET_L	37 70 71 72	
R4886	47K	SSD0_CLK24M	43 70 72	
R4895	100K	SSD_PMU_RESET_L	34	

1 2 5% 1/20W MF 201

Overloaded GPIOs

35	TPAD_KBD_WAKE_L	TPAD_KBD_WAKE_L	56
35	TPAD_SPI_INT_L	TPAD_SPI_INT_L	56
35	TPAD_ACTUATOR_DISABLE_L	TPAD_ACTUATOR_DISABLE_L	56
42	SPI_SOCROM_MOSI	SPI_SOCROM_MOSI	36 42
42	SPI_SOCROM_CLK	SPI_SOCROM_CLK	36 42
42	SPI_SOCROM_MISO	SPI_SOCROM_MISO	36 42

MAKE_BASE=TRUE

BOM_COST_GROUP=T290

VINAFIX.COM

苹果最新图纸

SYNC_MASTER=X589_BIGSUR — SYNC_DATE=02/13/2017

PAGE TITLE: SoC Project Support

Apple Inc.

DRAWING NUMBER: 051-04039 — SIZE: D

REVISION: 2.0.0

BRANCH:

PAGE: 48 OF 145

SHEET: 43 OF 85

NOTICE OF PROPRIETARY PROPERTY:
THE INFORMATION CONTAINED HEREIN IS THE PROPRIETARY PROPERTY OF APPLE INC.
THE POSESSOR AGREES TO THE FOLLOWING:
I TO MAINTAIN THIS DOCUMENT IN CONFIDENCE
II NOT TO REPRODUCE OR COPY IT
III NOT TO REVEAL OR PUBLISH IT IN WHOLE OR PART
IV ALL RIGHTS RESERVED

STOCKHOLM 2017

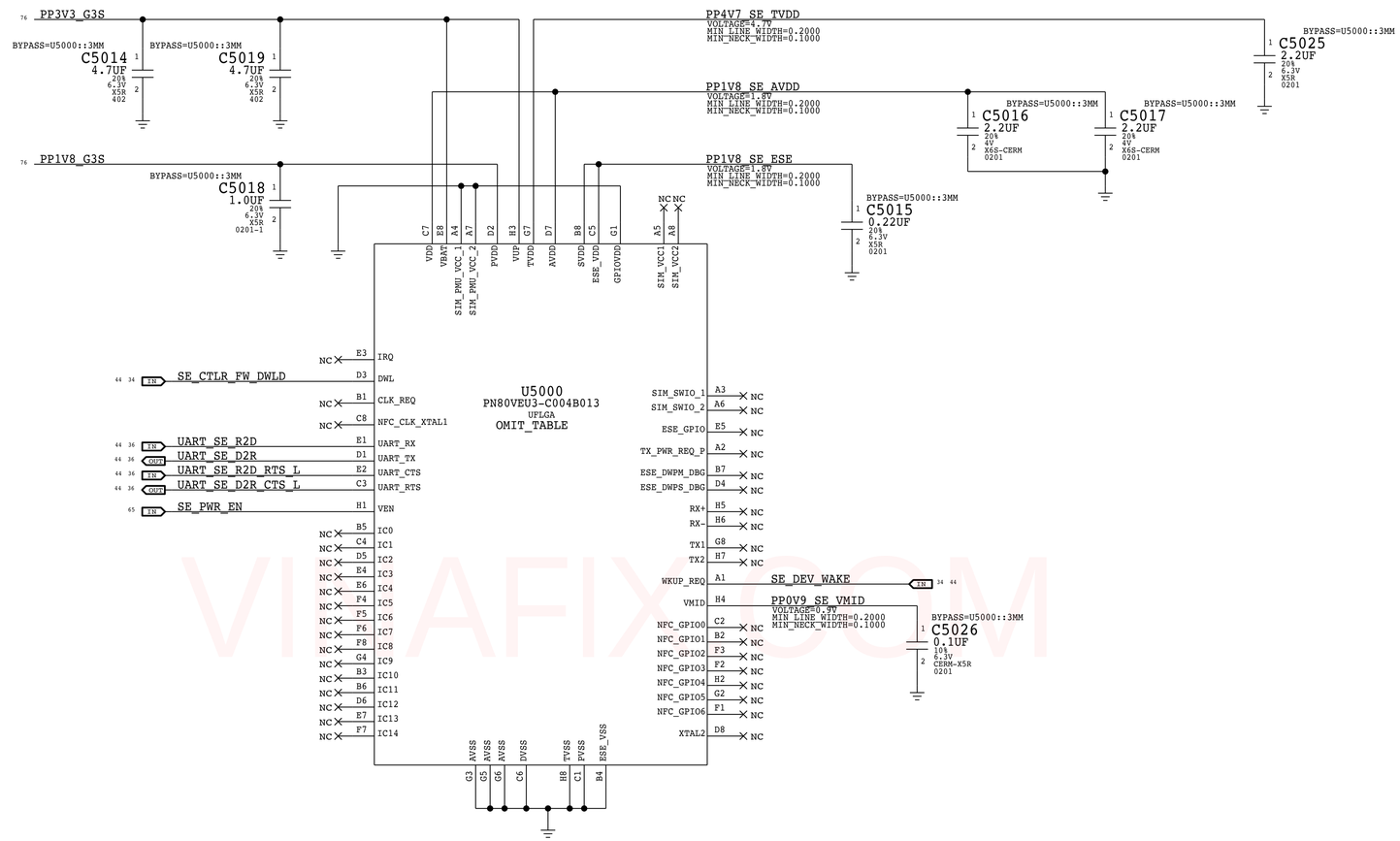

PART NUMBER	QTY	DESCRIPTION	REFERENCE DES	CRITICAL	BOM OPTION
998-11132	1	IC,RTM4,ES2.1,PN80V,DEV KY,S/W-M,UFLGA64	U5000	CRITICAL	SE:DEV_2017
338S00253	1	MODULE,NFC,NXP,LGA64	U5000	CRITICAL	SE:PROD_2017

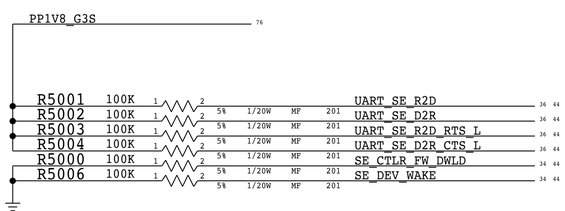

苹果最新图纸

BOM_COST_GROUP=T151

SYNC_MASTER=X941_MLB SYNC_DATE=03/10/2017

PAGE TITLE
Secure Element

Apple Inc.

DRAWING NUMBER 051-04039 SIZE D
REVISION 2.0.0
BRANCH
PAGE 50 OF 145
SHEET 44 OF 85

NOTICE OF PROPRIETARY PROPERTY:
THE INFORMATION CONTAINED HEREIN IS THE PROPRIETARY PROPERTY OF APPLE INC.
THE POSESSOR AGREES TO THE FOLLOWING:
I TO MAINTAIN THIS DOCUMENT IN CONFIDENCE
II NOT TO REPRODUCE OR COPY IT
III NOT TO REVEAL OR PUBLISH IT IN WHOLE OR PART
IV ALL RIGHTS RESERVED

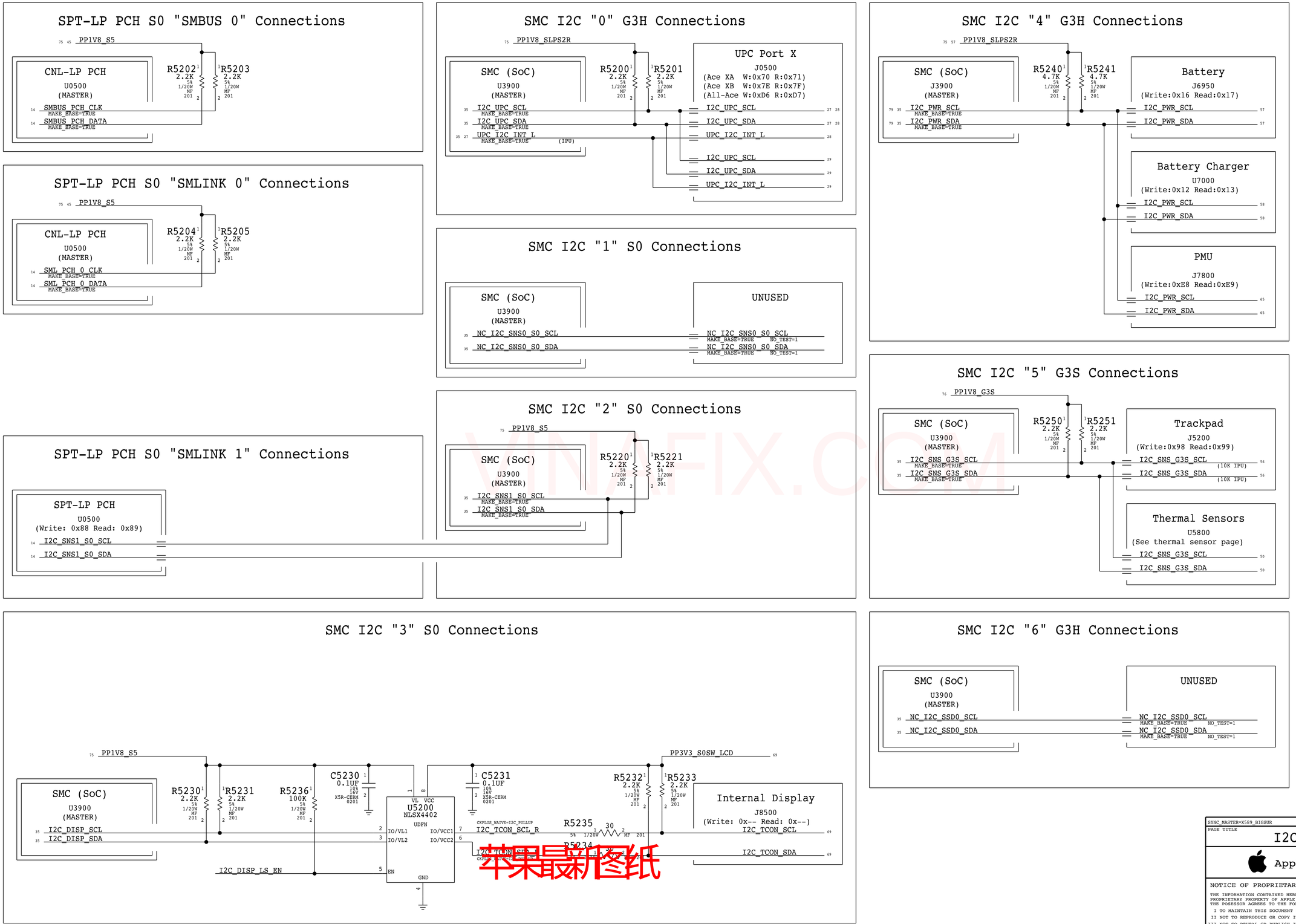

VINAFIX.COM
苹果最新图纸

BOM_COST_GROUP=SOC

SYNC_MASTER=X589_BIGSUR SYNC_DATE=02/13/2017

PAGE TITLE
I2C Connections 1

Apple Inc.

DRAWING NUMBER 051-04039 SIZE D

REVISION 2.0.0

BRANCH

PAGE 52 OF 145

SHEET 45 OF 85

NOTICE OF PROPRIETARY PROPERTY:
THE INFORMATION CONTAINED HEREIN IS THE PROPRIETARY PROPERTY OF APPLE INC.
THE POSESSOR AGREES TO THE FOLLOWING:
I TO MAINTAIN THIS DOCUMENT IN CONFIDENCE
II NOT TO REPRODUCE OR COPY IT
III NOT TO REVEAL OR PUBLISH IT IN WHOLE OR PART
IV ALL RIGHTS RESERVED

AP I2C "0" G3S Connections

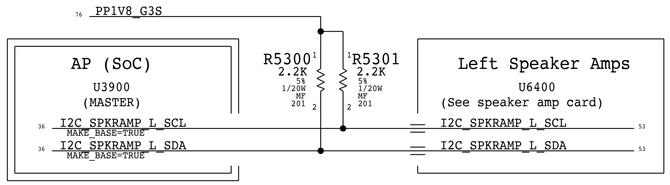

ISP I2C "0" G3S Connections

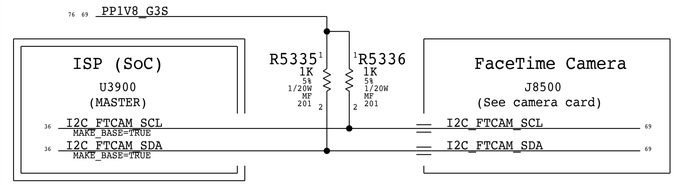

AP I2C "2" Codec Connections

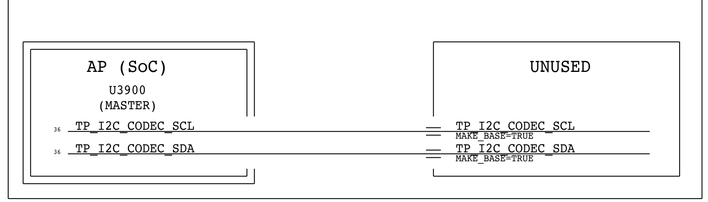

AP I2C "1" G3S Connections

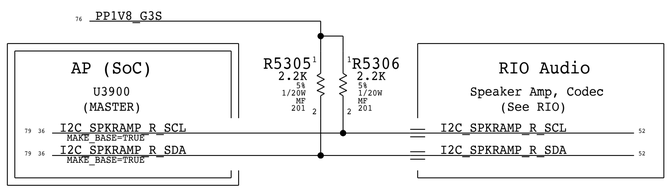

AP I2C "4" DFR Connections

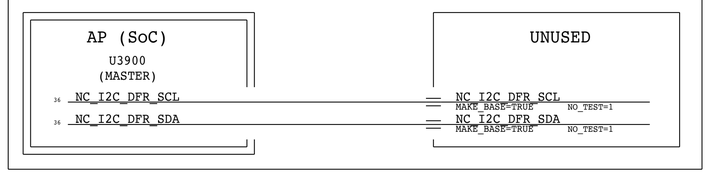

AP I2C "3" G3S Connections

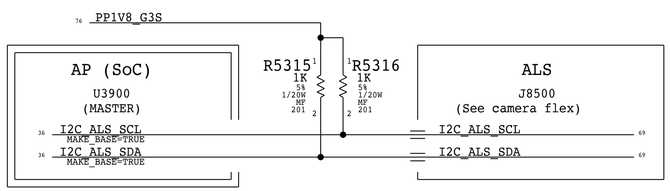

AP I2C "5" Awake Connections

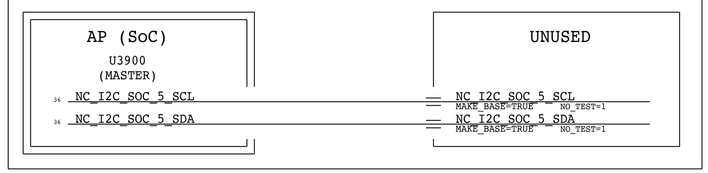

ISP I2C "1" G3S Connections

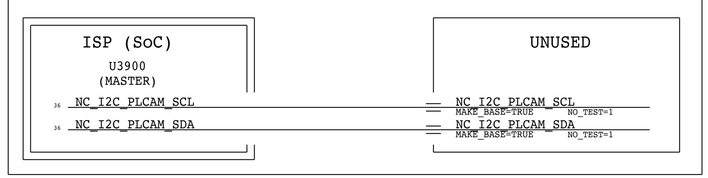

AOP I2C G3H Connections

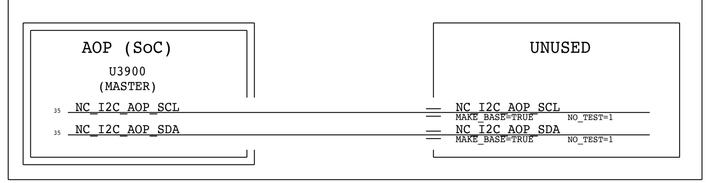

VINAFIX.COM

苹果最新图纸

BOM_COST_GROUP=SOC

SYNC_MASTER=X589_BIGSUR SYNC_DATE=02/13/2017

PAGE TITLE
I2C Connections 2

Apple Inc.

DRAWING NUMBER 051-04039 SIZE D

REVISION 2.0.0

BRANCH

PAGE 53 OF 145

SHEET 46 OF 85

NOTICE OF PROPRIETARY PROPERTY:
THE INFORMATION CONTAINED HEREIN IS THE PROPRIETARY PROPERTY OF APPLE INC.
THE POSESSOR AGREES TO THE FOLLOWING:
I TO MAINTAIN THIS DOCUMENT IN CONFIDENCE
II NOT TO REPRODUCE OR COPY IT
III NOT TO REVEAL OR PUBLISH IT IN WHOLE OR PART
IV ALL RIGHTS RESERVED

INA21X PARTS HAVE MINOR LEAKAGE PATH FROM INPUTS TO OUTPUT WHEN UNPOWERED.
PULL-DOWN RESISTERS ON INA OUTPUTS BLEED OFF THE LEAKAGE CURRENT TO PREVENT
SIGNAL PUMP-UP.

CPU High Side Current Sense (IC0R)

GAIN: 100X, EDP: 10.16 A
Rsense: 0.003 (R5400)
VSENSE: 30.475 mV, RANGE: 8.842 A
SMC ADC: 04

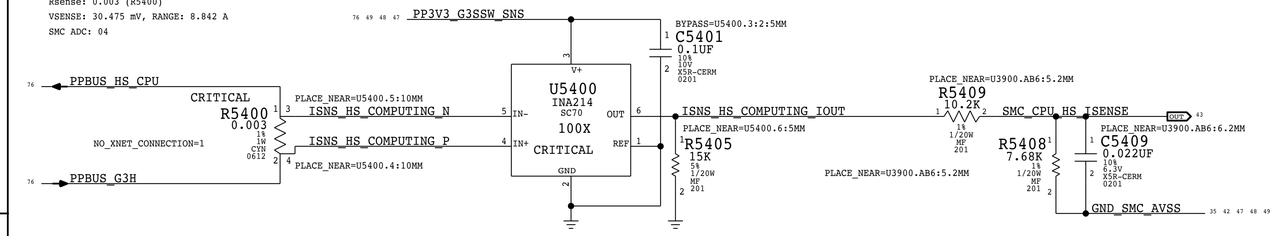

5V G3S (IO5R)

GAIN: 100X, EDP: 4.2 A
Rsense: 0.005 (R5410)
VSENSE: 21 mV, RANGE: 5 A
SMC ADC: 06

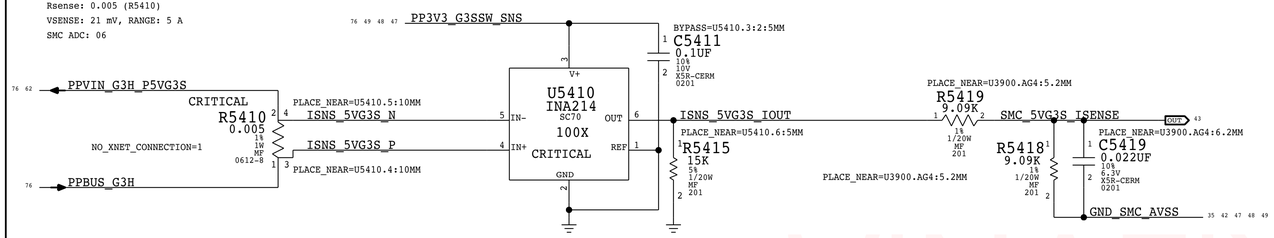

3V3 G3H MAIN (IO3R)

GAIN: 100X, EDP: 4.702 A
Rsense: 0.005 (R5420)
VSENSE: 23.510 mV, RANGE: 5 A
SMC ADC: 05

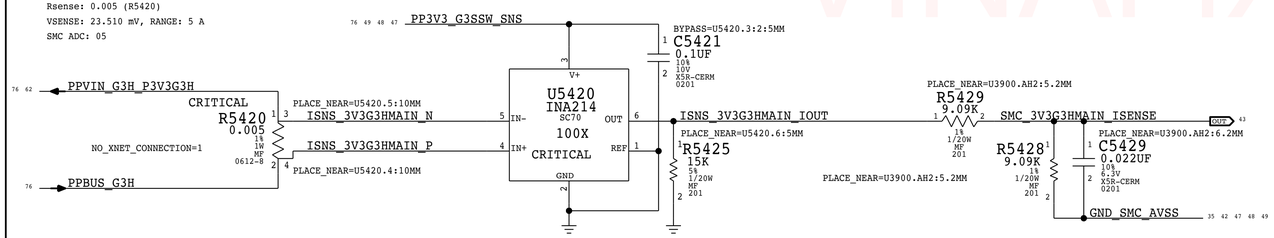

3V3 G3H RTC (xxxx)

GAIN: X, EDP: 0.753 A
Rsense: 0.005 (R5430)
VSENSE: 3.767 mV, RANGE: 0.756 A
PMU AMUX: x

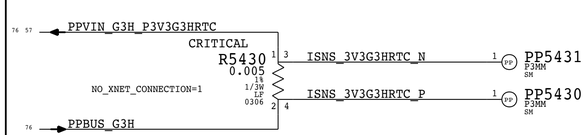

PBUS Voltage Sense & Enable (VP0R)

Gain: 0.089x
Vnominal: 13.05 V, Range: 14.05 V
SMC ADC: 02

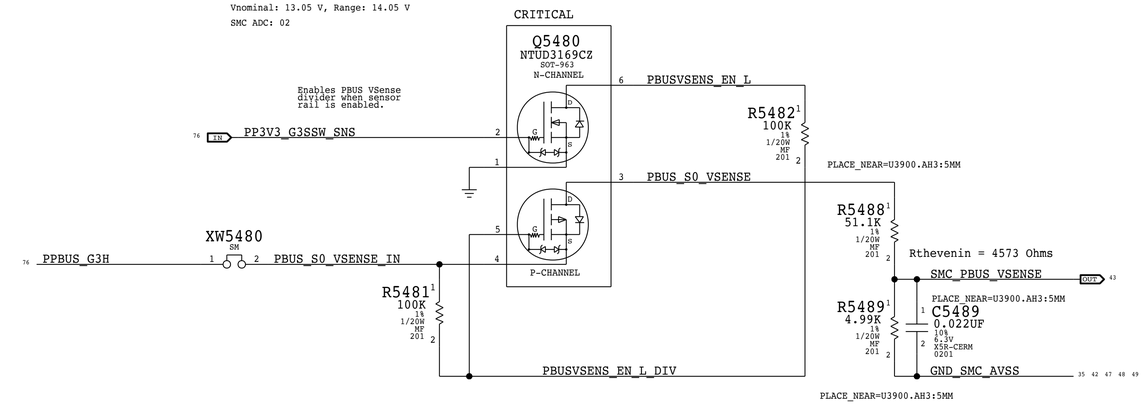

DC In Voltage Sense & Enable (VD0R)

Gain: 0.148x
Vnominal: 16.5 V, Range: 22.29 V
SMC ADC: 00

DCIN sensing no longer gated. FETs removed to avoid power draw on PU on CHGR_AUX_OK.

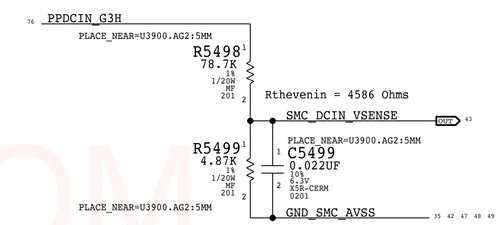

DC-IN (AMON) Current Sense (ID0R)

Charger Gain: 20x, EDP: 3.0 A
RSENSE: 0.010 (R7020)
SMC ADC: 01

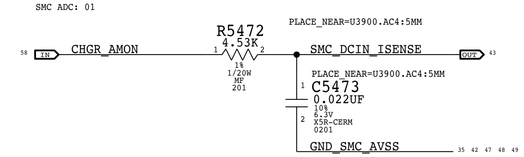

Charger (BMON) Current Sense (IPBR)

Charger Gain: 7.9x, EDP: 6.5 A
RSENSE: 0.005 (R7060)
SMC ADC: 03

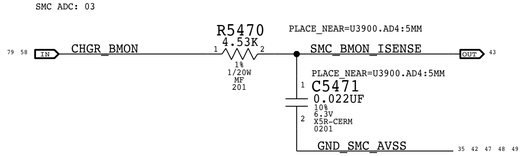

BOM_COST_GROUP=SENSORS

DESIGN: X1032/MLB	
LAST CHANGE: Fri Sep 15 15:09:18 2017	
PAGE TITLE: Power Sensors High Side	
Apple Inc.	DRAWING NUMBER: 051-04039 SIZE: D
	REVISION: 2.0.0
NOTICE OF PROPRIETARY PROPERTY: THE INFORMATION CONTAINED HEREIN IS THE PROPRIETARY PROPERTY OF APPLE INC. THE POSESSOR AGREES TO THE FOLLOWING: I TO MAINTAIN THIS DOCUMENT IN CONFIDENCE II NOT TO REPRODUCE OR COPY IT III NOT TO REVEAL OR PUBLISH IT IN WHOLE OR PART IV ALL RIGHTS RESERVED	BRANCH
	PAGE: 54 OF 145
	SHEET: 47 OF 85

VINAFIX.COM
苹果最新图纸

VDDMAIN (ISLC)

GAIN: 200X, EDP: 10.90 A
Rsense: 0.001 (R5500)
VSENSE: 10.90 mV, RANGE: 10.988 A
PMU AMUX: A0

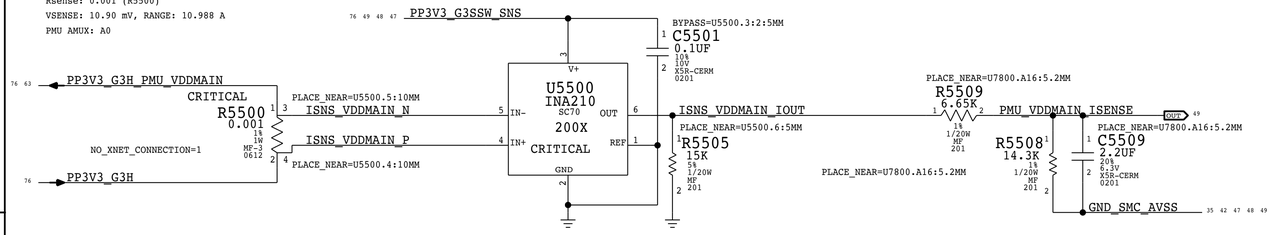

Wireless (IAPC)

GAIN: 200X, EDP: 1.5 A
Rsense: 0.010 (R5510)
VSENSE: 15 mV, RANGE: 1.5 A
PMU AMUX: A2

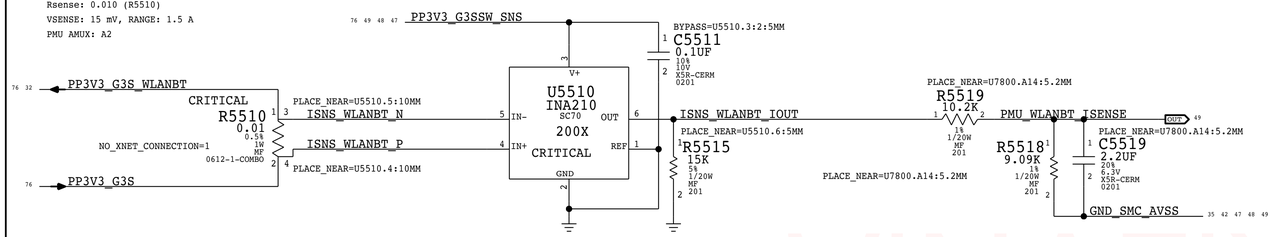

VINAFIX.COM

苹果最新图纸

BOM_COST_GROUP=SENSORS

DESIGN: X1032/MLB
LAST CHANGE: Fri Sep 15 15:09:18 2017

PAGE TITLE
Power Sensors Load Side

Apple Inc.

DRAWING NUMBER 051-04039
SIZE D
REVISION 2.0.0
BRANCH
PAGE 55 OF 145
SHEET 48 OF 85

NOTICE OF PROPRIETARY PROPERTY:
THE INFORMATION CONTAINED HEREIN IS THE PROPRIETARY PROPERTY OF APPLE INC.
THE POSESSOR AGREES TO THE FOLLOWING:
I TO MAINTAIN THIS DOCUMENT IN CONFIDENCE
II NOT TO REPRODUCE OR COPY IT
III NOT TO REVEAL OR PUBLISH IT IN WHOLE OR PART
IV ALL RIGHTS RESERVED

SSD (IH0R)

GAIN: 500X, EDP: 0.654 A
Rsense: 0.010 (R5600)
VSENSE: 6.536 mV, RANGE: 1.8 A
SMC ADC: 07

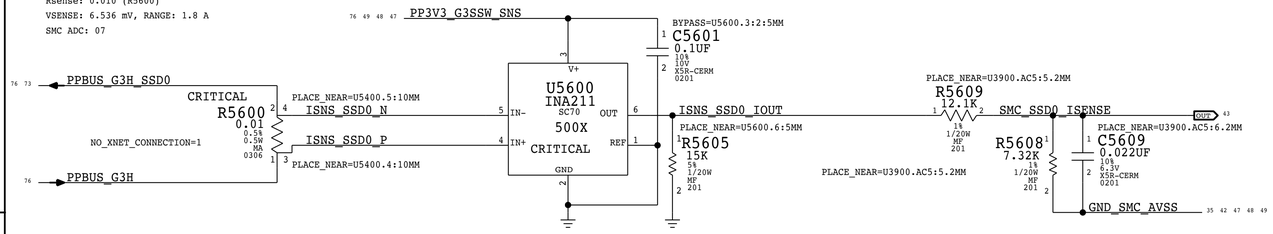

Trackpad (xxxx)

GAIN: x, EDP: 2.3 A
Rsense: 0.010 (R5610)
VSENSE: 23 mV, RANGE: 2.344 A
PMU AMUX: x

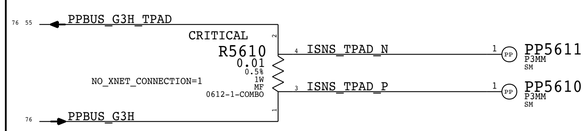

LCD Backlight (IBLR)

GAIN: 100X, EDP: 0.902 A
Rsense: 0.025 (R8400)
VSENSE: 22.549 mV, RANGE: 0.902 A
PMU AMUX: A4

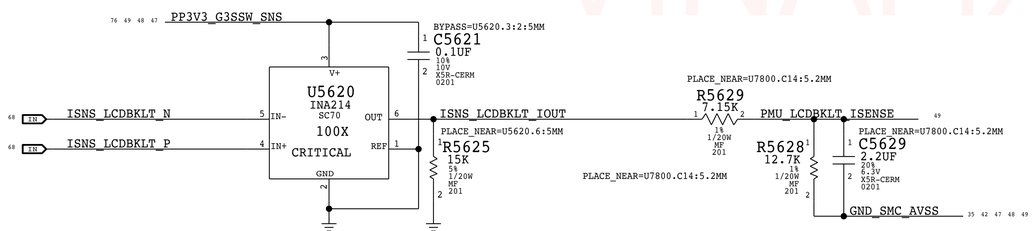

CPU CORE VOLTAGE SENSE (VCAC)

PMU AMUX: A5

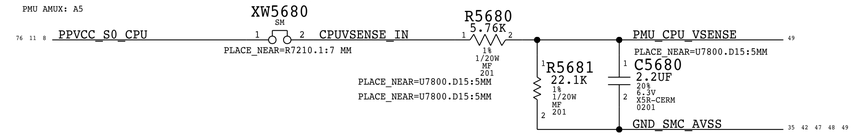

NAND 2V7 VOLTAGE SENSE (VHNC)

PMU AMUX: A6

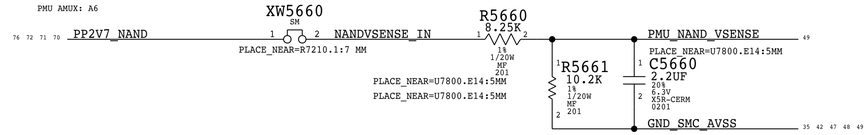

VCCIO VOLTAGE SENSE (VCIC)

PMU AMUX: A7

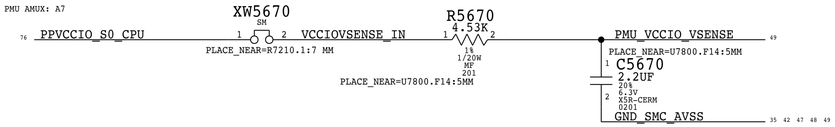

PMU ADC Assignments

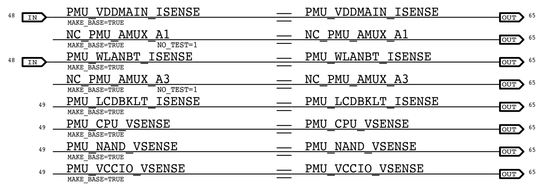

VINAFIX.COM

苹果最新图纸

BOM_COST_GROUP=SENSORS

DESIGN: X1032/MLB
LAST CHANGE: Fri Sep 15 15:09:18 2017

PAGE TITLE
Power Sensors Extended

Apple Inc.

DRAWING NUMBER 051-04039
SIZE D
REVISION 2.0.0
BRANCH
PAGE 56 OF 145
SHEET 49 OF 85

NOTICE OF PROPRIETARY PROPERTY:
THE INFORMATION CONTAINED HEREIN IS THE PROPRIETARY PROPERTY OF APPLE INC.
THE POSESSOR AGREES TO THE FOLLOWING:
I TO MAINTAIN THIS DOCUMENT IN CONFIDENCE
II NOT TO REPRODUCE OR COPY IT
III NOT TO REVEAL OR PUBLISH IT IN WHOLE OR PART
IV ALL RIGHTS RESERVED

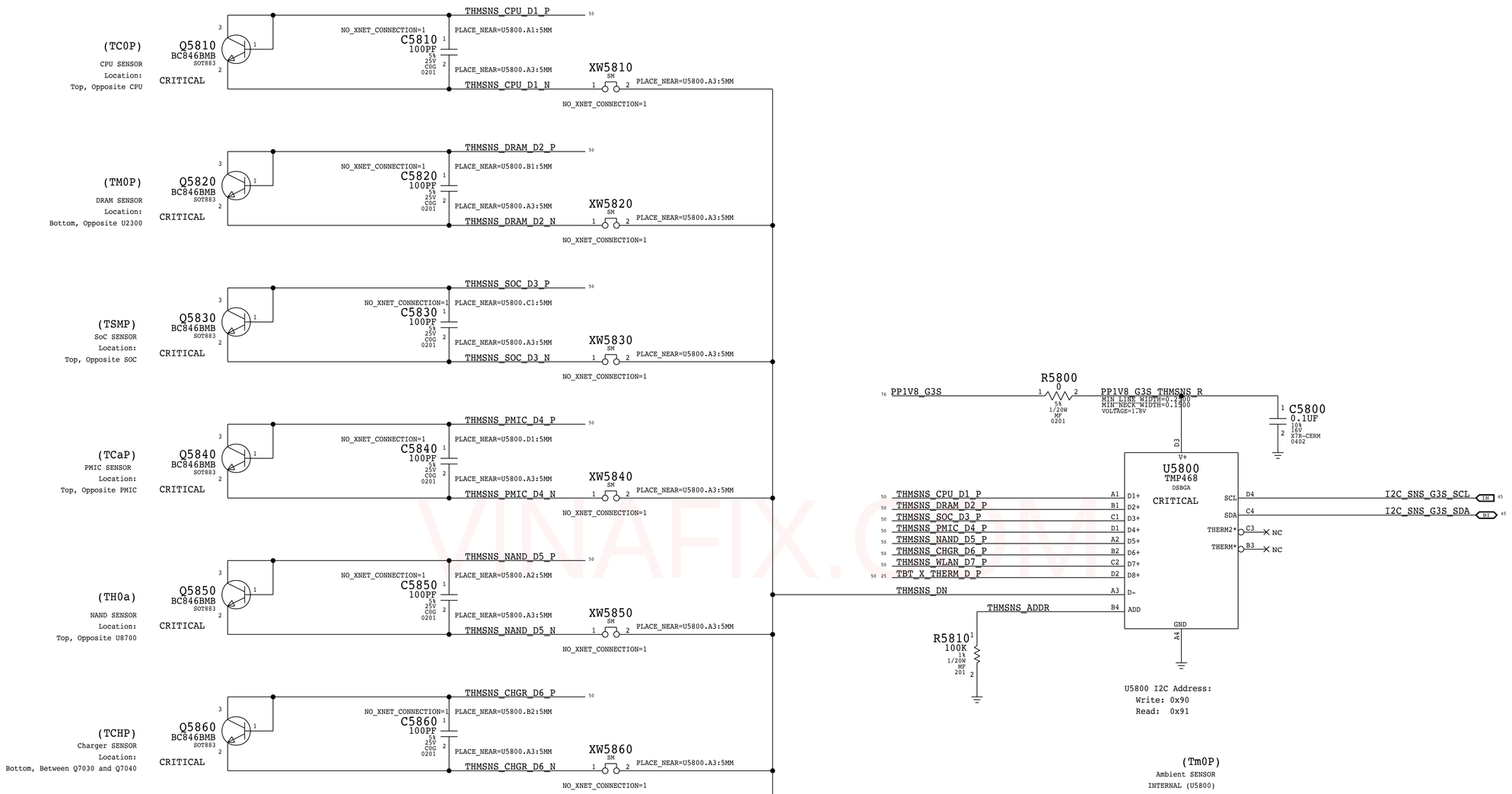

VINAFIX.COM

苹果最新图纸

BOM_COST_GROUP=SENSORS

DESIGN: X1032/MLB
LAST CHANGE: Fri Sep 15 15:09:18 2017

PAGE TITLE
Thermal Sensors

Apple Inc.

DRAWING NUMBER 051-04039
SIZE D
REVISION 2.0.0
BRANCH
PAGE 58 OF 145
SHEET 50 OF 85

NOTICE OF PROPRIETARY PROPERTY:
THE INFORMATION CONTAINED HEREIN IS THE PROPRIETARY PROPERTY OF APPLE INC.
THE POSESSOR AGREES TO THE FOLLOWING:
I TO MAINTAIN THIS DOCUMENT IN CONFIDENCE
II NOT TO REPRODUCE OR COPY IT
III NOT TO REVEAL OR PUBLISH IT IN WHOLE OR PART
IV ALL RIGHTS RESERVED

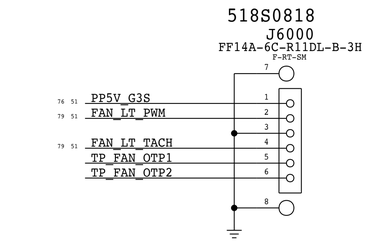

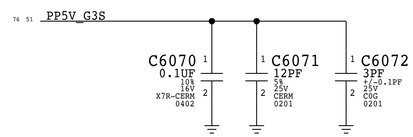

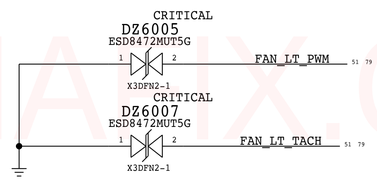

FAN SUPPORT

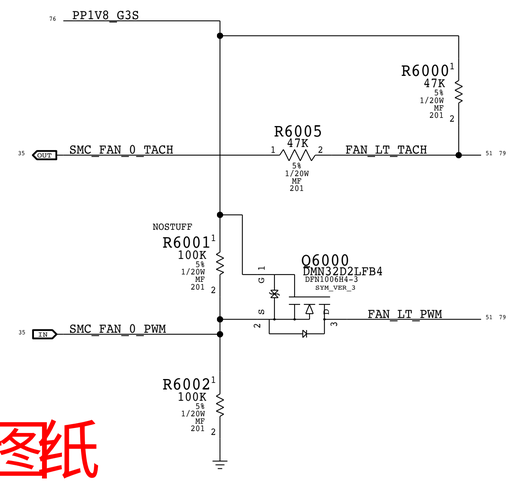

苹果最新图纸

VINAFIX.COM

BOM_COST_GROUP=FAN

SYNC_MASTER=X1032_MLB_P4BP	SYNC_DATE=02/13/2017
PAGE TITLE: Fans	
Apple Inc.	DRAWING NUMBER: 051-04039 SIZE: D
	REVISION: 2.0.0
NOTICE OF PROPRIETARY PROPERTY: THE INFORMATION CONTAINED HEREIN IS THE PROPRIETARY PROPERTY OF APPLE INC. THE POSESSOR AGREES TO THE FOLLOWING: I TO MAINTAIN THIS DOCUMENT IN CONFIDENCE II NOT TO REPRODUCE OR COPY IT III NOT TO REVEAL OR PUBLISH IT IN WHOLE OR PART IV ALL RIGHTS RESERVED	BRANCH
	PAGE: 60 OF 145
	SHEET: 51 OF 85

On RIO Board:
AMR
CODEC
MESA
SPKR AMP

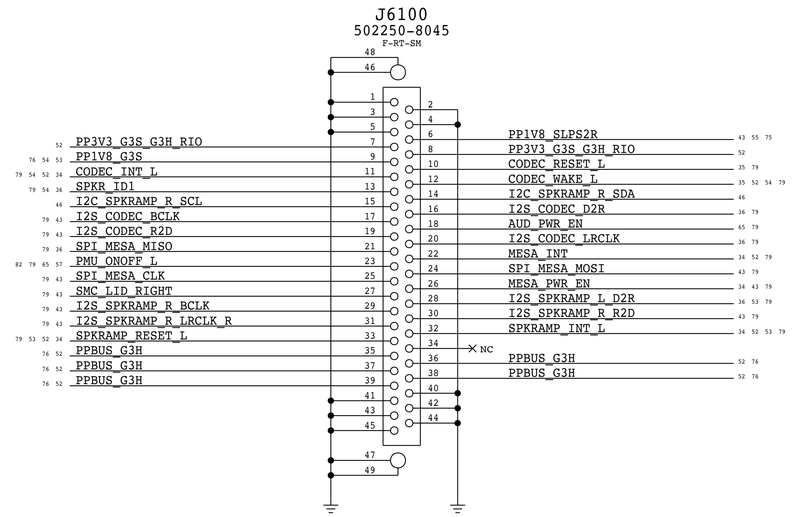

518S00155

Mates with 998-11285
on X1032 RIO Flex J0200

VINAFIX.COM

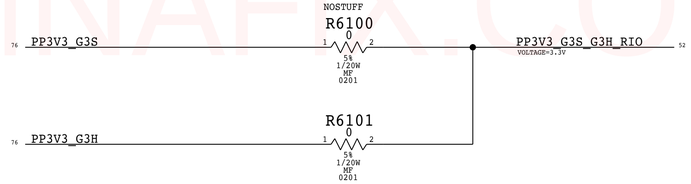

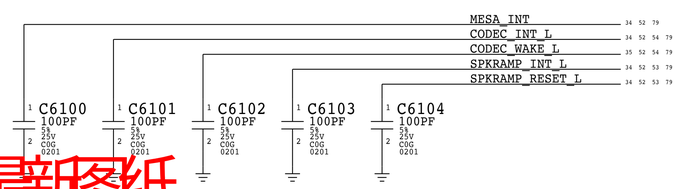

苹果最新图纸

BOM_COST_GROUP=AUDIO

PAGE TITLE	RIO Connector
	Apple Inc.
DRAWING NUMBER	051-04039
SIZE	D
REVISION	2.0.0
BRANCH	
PAGE	61 OF 145
SHEET	52 OF 85

NOTICE OF PROPRIETARY PROPERTY:
THE INFORMATION CONTAINED HEREIN IS THE PROPRIETARY PROPERTY OF APPLE INC.
THE POSESSOR AGREES TO THE FOLLOWING:
I TO MAINTAIN THIS DOCUMENT IN CONFIDENCE
II NOT TO REPRODUCE OR COPY IT
III NOT TO REVEAL OR PUBLISH IT IN WHOLE OR PART
IV ALL RIGHTS RESERVED

1X MONO SPEAKER AMPLIFIER

APN: 353S01629
GAIN: 0DBFS = 6.31 VRMS

LEFT AMPLIFIER

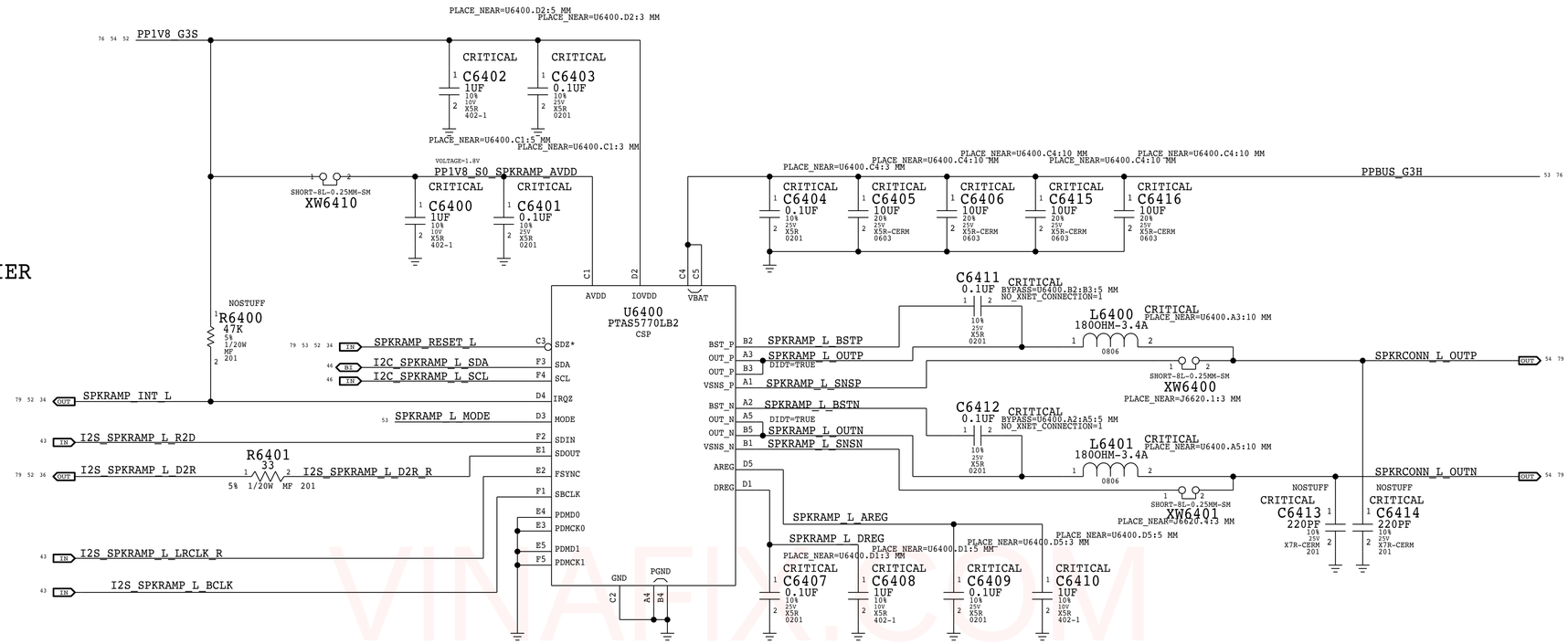

VINAFIX.COM

LEFT BULK CAPACITANCE

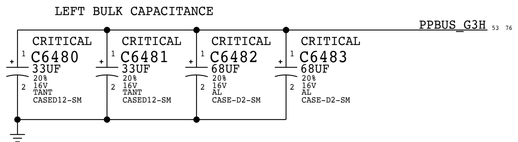

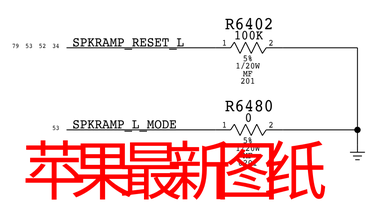

苹果最新图纸

MODE PIN	I2C ADDR	CHANNEL
GND	0x31	LEFT
470 to GND	0x32	
470 to IOVDD	0x33	
2k2 to GND	0x34	
2k2 to IOVDD	0x35	
10k to GND	0x36	
10k to IOVDD	0x37	
47k to IOVDD	0x38	RIGHT

BOM_COST_GROUP=AUDIO

DESIGN: X1032/MLB
LAST CHANGE: Fri Sep 15 15:09:18 2017

PAGE TITLE
Audio Speaker Amplifiers

Apple Inc.

DRAWING NUMBER 051-04039 SIZE D
REVISION 2.0.0
BRANCH
PAGE 64 OF 145
SHEET 53 OF 85

NOTICE OF PROPRIETARY PROPERTY:
THE INFORMATION CONTAINED HEREIN IS THE PROPRIETARY PROPERTY OF APPLE INC.
THE POSESSOR AGREES TO THE FOLLOWING:
I TO MAINTAIN THIS DOCUMENT IN CONFIDENCE
II NOT TO REPRODUCE OR COPY IT
III NOT TO REVEAL OR PUBLISH IT IN WHOLE OR PART
IV ALL RIGHTS RESERVED

DMIC Secure Disable

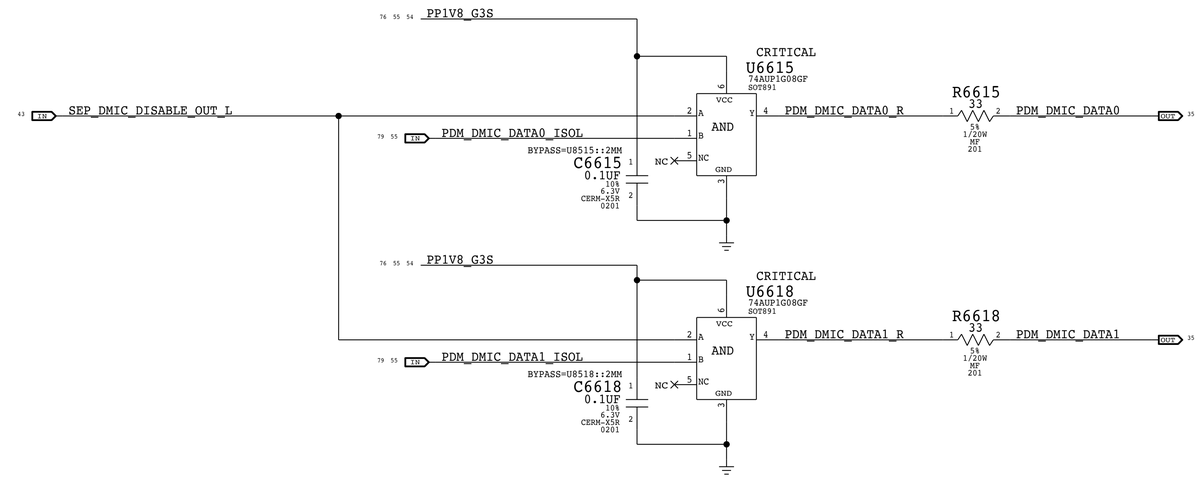

LEFT SPEAKER CONNECTOR

APN: 518S0521

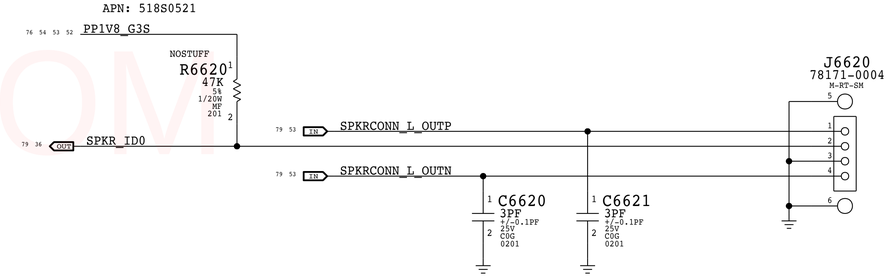

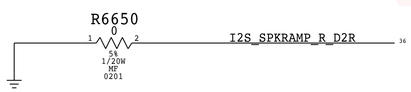

AUDIO JACK CODEC PULL-UPS

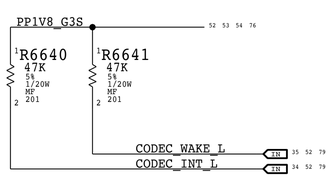

RIGHT SPEAKER ID

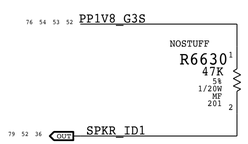

BOM_COST_GROUP=AUDIO

VINAFIX.COM
苹果最新图纸

DESIGN: X1032/MLB
LAST CHANGE: Fri Sep 15 15:09:18 2017

PAGE TITLE
Audio Connectors

Apple Inc.

DRAWING NUMBER 051-04039
SIZE D
REVISION 2.0.0
BRANCH
PAGE 66 OF 145
SHEET 54 OF 85

NOTICE OF PROPRIETARY PROPERTY:
THE INFORMATION CONTAINED HEREIN IS THE PROPRIETARY PROPERTY OF APPLE INC.
THE POSESSOR AGREES TO THE FOLLOWING:
I TO MAINTAIN THIS DOCUMENT IN CONFIDENCE
II NOT TO REPRODUCE OR COPY IT
III NOT TO REVEAL OR PUBLISH IT IN WHOLE OR PART
IV ALL RIGHTS RESERVED

IPD B2B CONNECTOR

Bottom side contacts used
Pinout reversed from flex

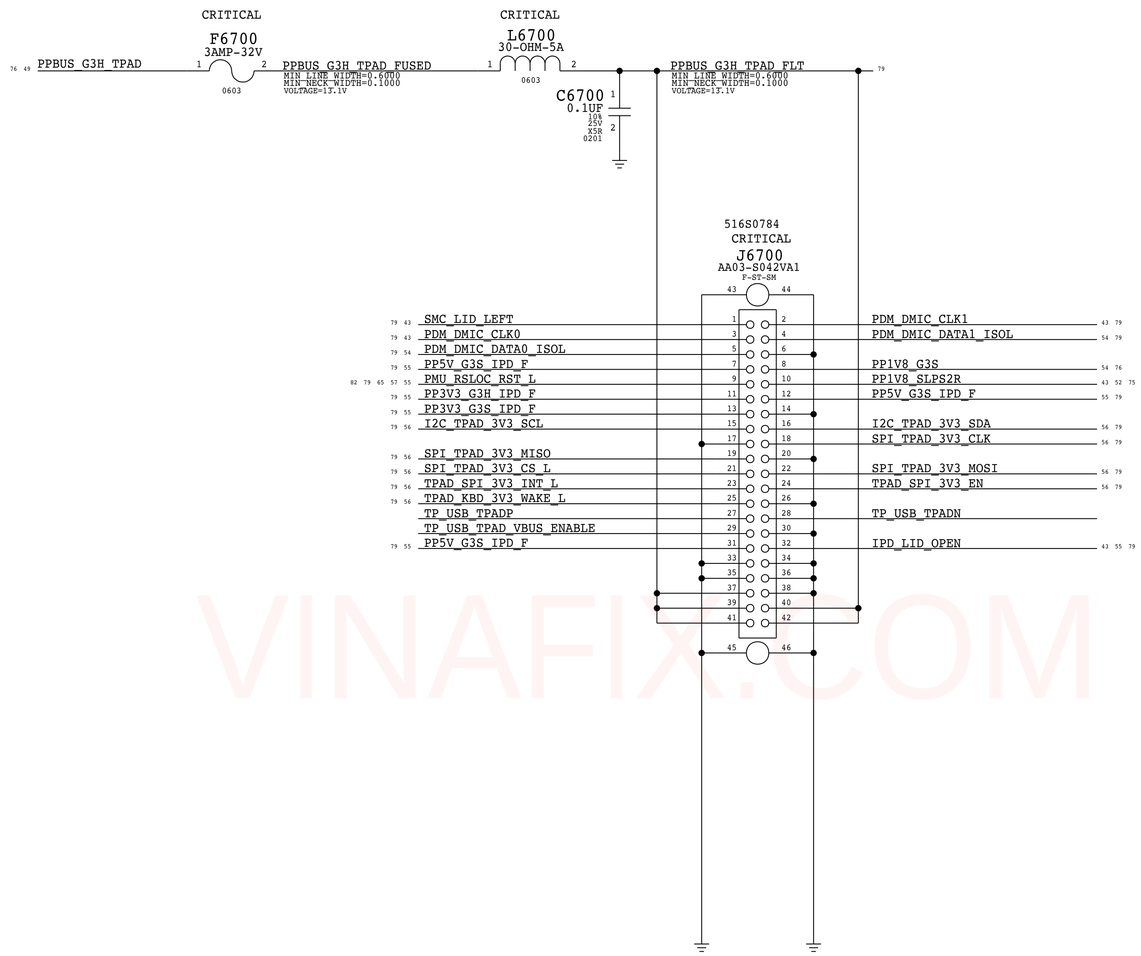

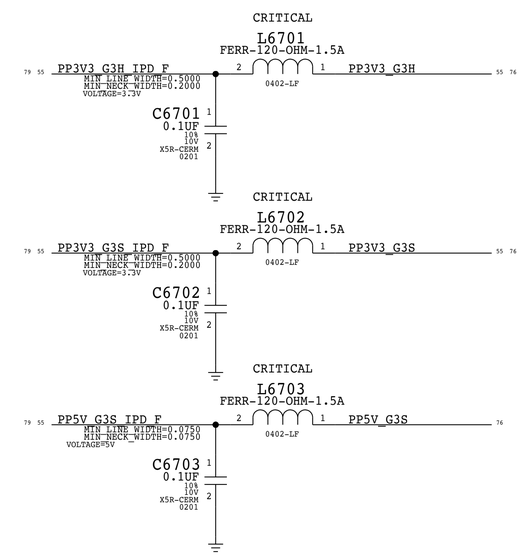

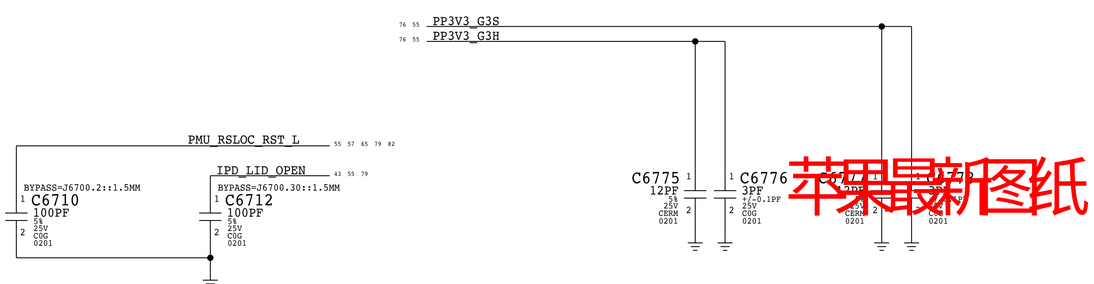

IPD Connector Cowling Bosses

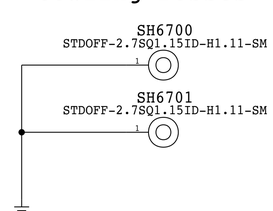

BOM_COST_GROUP=TRACKPAD

SYNC_MASTER=X260_MLB SYNC_DATE=02/16/2017

PAGE TITLE
Keyboard & Trackpad 1

Apple Inc.

DRAWING NUMBER 051-04039 SIZE D
REVISION 2.0.0
BRANCH
PAGE 67 OF 145
SHEET 55 OF 85

NOTICE OF PROPRIETARY PROPERTY:
THE INFORMATION CONTAINED HEREIN IS THE PROPRIETARY PROPERTY OF APPLE INC.
THE POSESSOR AGREES TO THE FOLLOWING:
I TO MAINTAIN THIS DOCUMENT IN CONFIDENCE
II NOT TO REPRODUCE OR COPY IT
III NOT TO REVEAL OR PUBLISH IT IN WHOLE OR PART
IV ALL RIGHTS RESERVED

VINAFIX.COM
苹果最新图纸

Trackpad Level Shifting

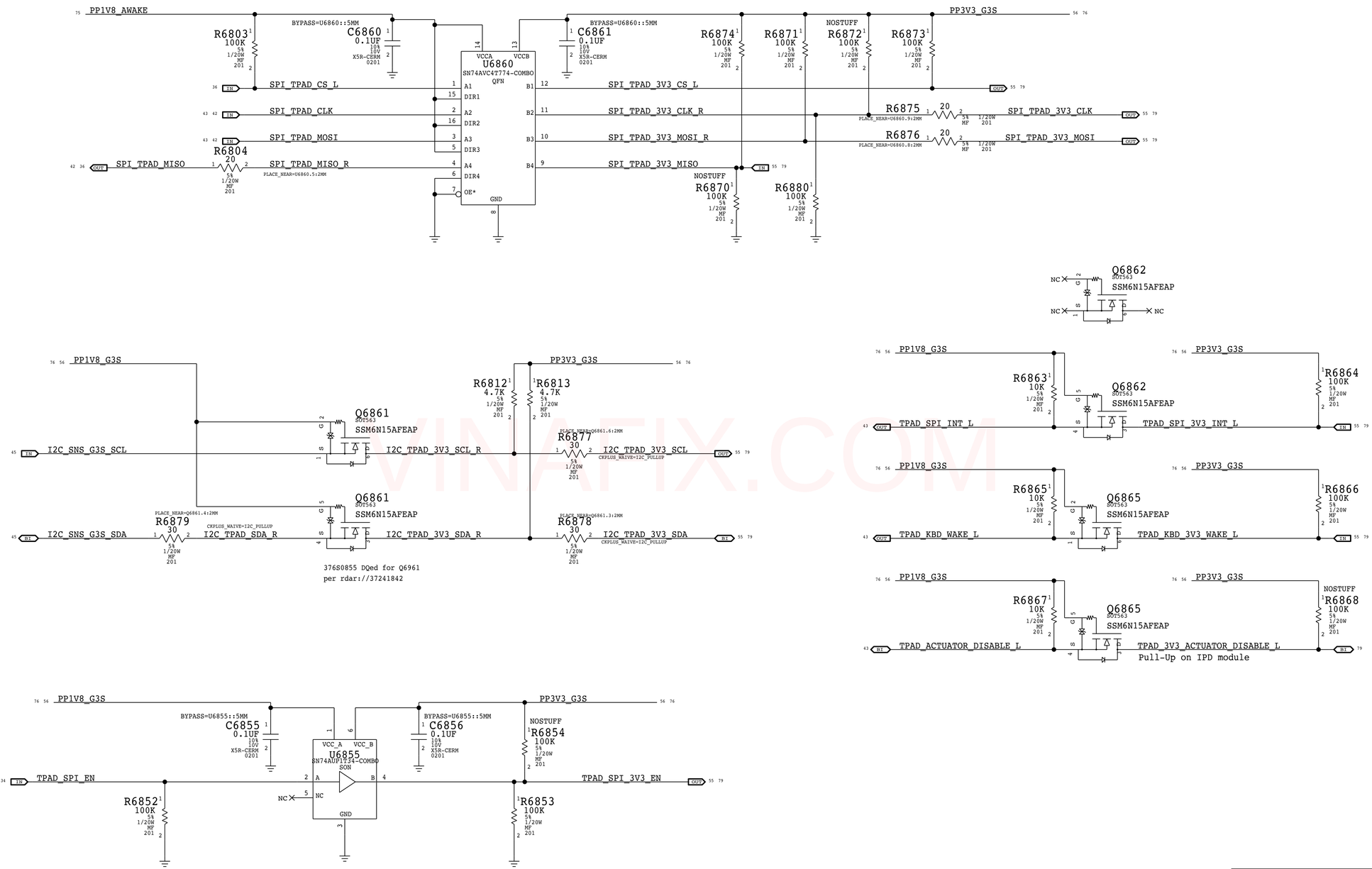

苹果最新图纸

BOM_COST_GROUP=TRACKPAD

SYNC_MASTER=X589_CARD_IPD SYNC_DATE=02/16/2017

PAGE TITLE
Keyboard & Trackpad 2

Apple Inc.

DRAWING NUMBER 051-04039 SIZE D

REVISION 2.0.0

BRANCH

PAGE 68 OF 145

SHEET 56 OF 85

NOTICE OF PROPRIETARY PROPERTY:
THE INFORMATION CONTAINED HEREIN IS THE PROPRIETARY PROPERTY OF APPLE INC.
THE POSESSOR AGREES TO THE FOLLOWING:
I TO MAINTAIN THIS DOCUMENT IN CONFIDENCE
II NOT TO REPRODUCE OR COPY IT
III NOT TO REVEAL OR PUBLISH IT IN WHOLE OR PART
IV ALL RIGHTS RESERVED

VINAFIX.COM

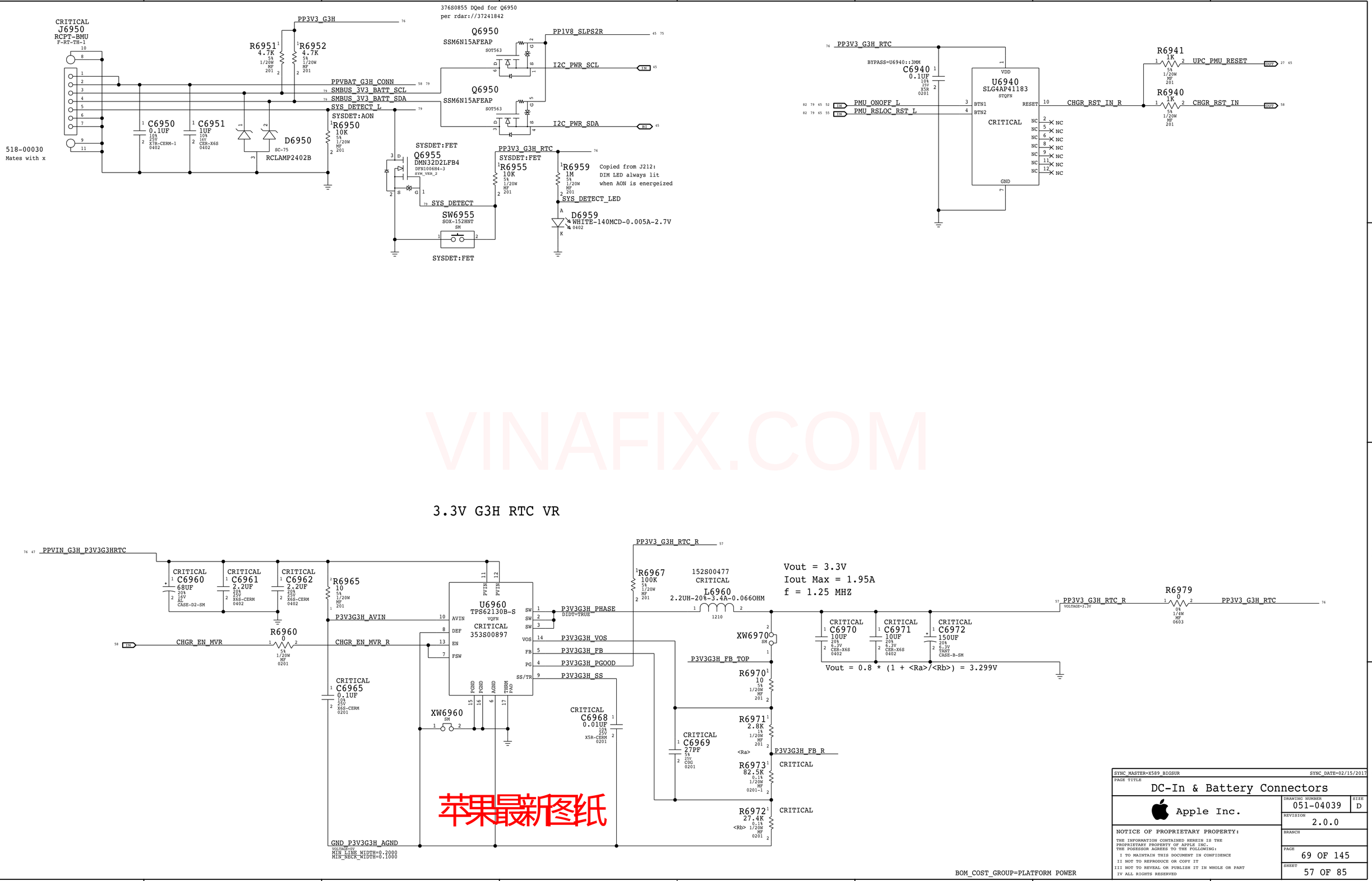

VINAFIX.COM
苹果最新图纸

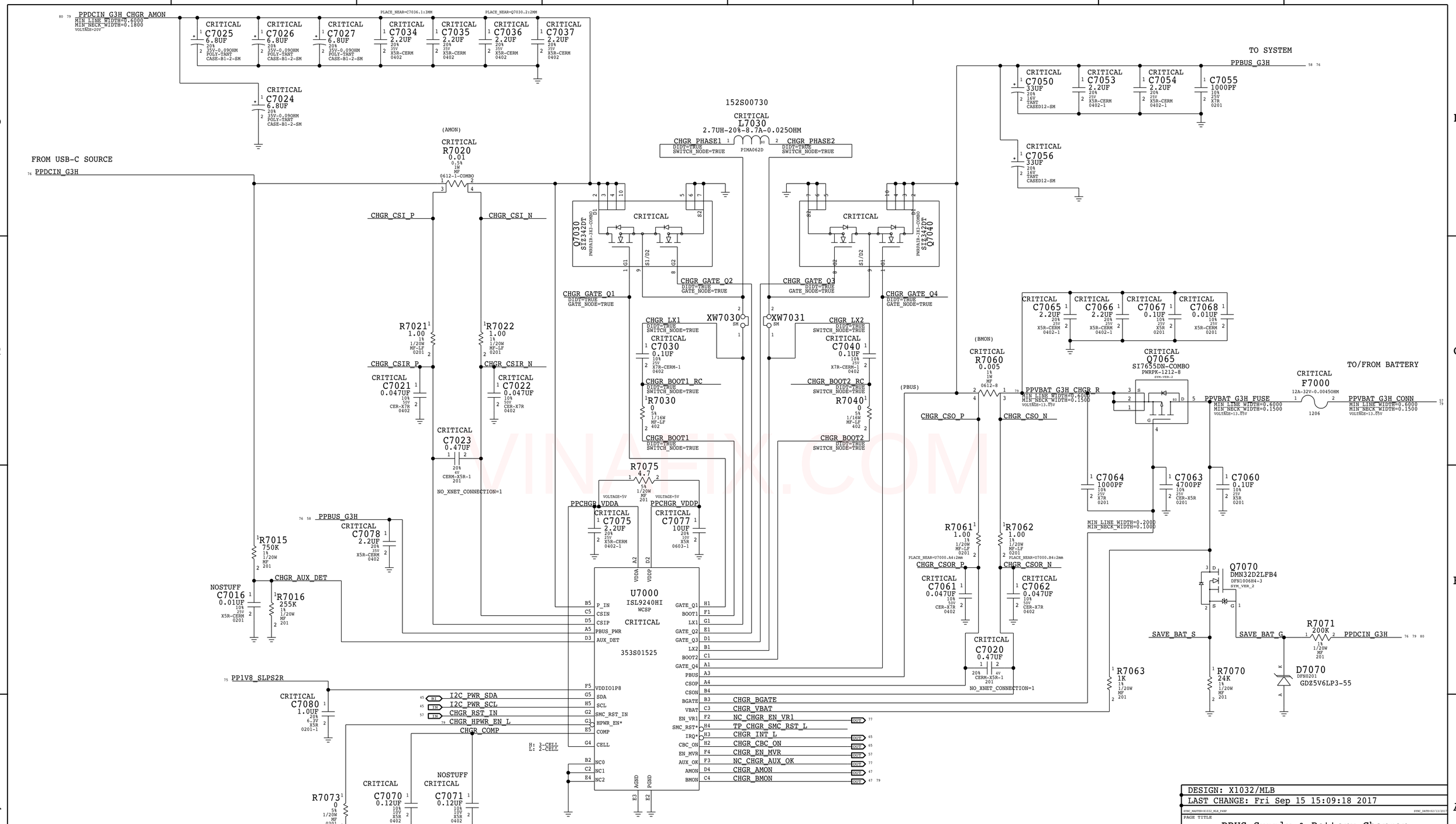

WINAEM.COM

苹果最新图纸

DESIGN: X1032/MLB
LAST CHANGE: Fri Sep 15 15:09:18 2017

PAGE TITLE
PBUS Supply & Battery Charger

Apple Inc.

DRAWING NUMBER 051-04039
SIZE D
REVISION 2.0.0
BRANCH
PAGE 70 OF 145
SHEET 58 OF 85

NOTICE OF PROPRIETARY PROPERTY:
THE INFORMATION CONTAINED HEREIN IS THE PROPRIETARY PROPERTY OF APPLE INC.
THE POSESSOR AGREES TO THE FOLLOWING:
I TO MAINTAIN THIS DOCUMENT IN CONFIDENCE
II NOT TO REPRODUCE OR COPY IT
III NOT TO REVEAL OR PUBLISH IT IN WHOLE OR PART
IV ALL RIGHTS RESERVED

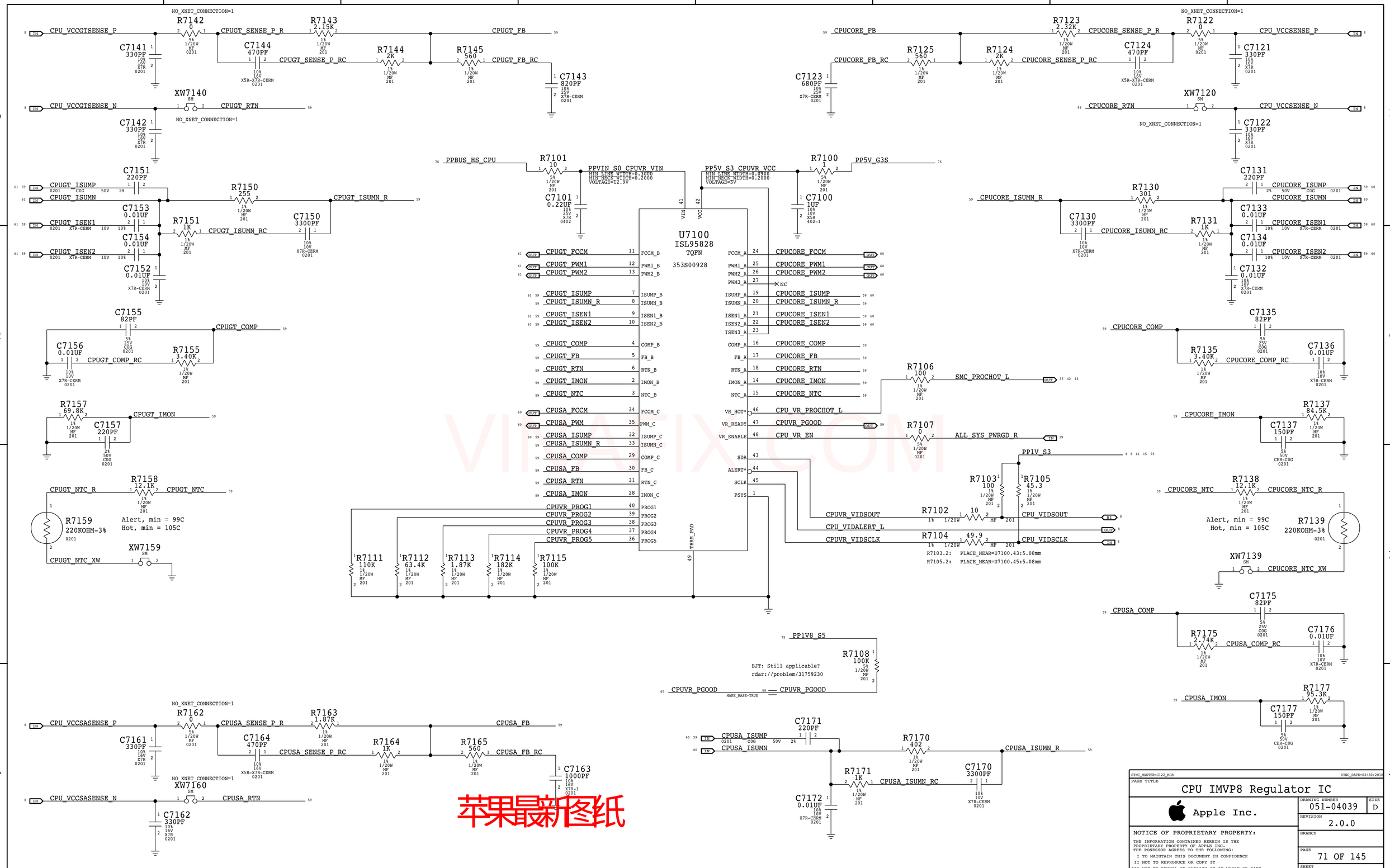
CPU_VCCGTSENSE_P
R7142 0
CPUGT_SENSE_P_R
R7143 2.15K
CPUGT_FB
C7141 330PF
C7144 470PF
CPUGT_SENSE_P_RC
R7144 2K
R7145 560
CPUGT_FB_RC
C7143 820PF
CPU_VCCGTSENSE_N
XW7140
CPUGT_RTN
C7142 330PF
NO_XNET_CONNECTION=1
CPUCORE_FB
R7123 2.32K
CPUCORE_SENSE_P_R
R7122 0
CPU_VCCSENSE_P
C7121 330PF
C7123 680PF
CPUCORE_FB_RC
R7125 560
R7124 2K
CPUCORE_SENSE_P_RC
C7124 470PF
CPUCORE_RTN
XW7120
CPU_VCCSENSE_N
C7122 330PF
PPBUS_HS_CPU
R7101 10
PPVIN_S0_CPUVR_VIN
MIN_LINE_WIDTH=0.3000
MIN_NECK_WIDTH=0.2000
VOLTAGE=12.9V
C7101 0.22UF
PP5V_S3_CPUVR_VCC
MIN_LINE_WIDTH=0.1700
MIN_NECK_WIDTH=0.2000
VOLTAGE=5V
R7100 1
PP5V_G3S
C7100 1UF
C7151 220PF
CPUGT_ISUMP
CPUGT_ISUMN
R7150 255
CPUGT_ISUMN_R
C7153 0.01UF
R7151 1K
C7150 3300PF
CPUGT_ISUMN_RC
C7154 0.01UF
CPUGT_ISEN1
CPUGT_ISEN2
C7152 0.01UF
U7100
ISL95828
TQFN
353S00928
VIN
VCC
THERM_PAD
FCCM_B
PWM1_B
PWM2_B
ISUMP_B
ISUMN_B
ISEN1_B
ISEN2_B
COMP_B
FB_B
RTN_B
IMON_B
NTC_B
FCCM_C
PWM_C
ISUMP_C
ISUMN_C
COMP_C
FB_C
RTN_C
IMON_C
PROG1
PROG2
PROG3
PROG4
PROG5
FCCM_A
PWM1_A
PWM2_A
PWM3_A
ISUMP_A
ISUMN_A
ISEN1_A
ISEN2_A
ISEN3_A
COMP_A
FB_A
RTN_A
IMON_A
NTC_A
VR_HOT*
VR_READY
VR_ENABLE
SDA
ALERT*
SCLK
PSYS
CPUGT_FCCM
CPUGT_PWM1
CPUGT_PWM2
CPUGT_ISUMP
CPUGT_ISUMN_R
CPUGT_ISEN1
CPUGT_ISEN2
CPUGT_COMP
CPUGT_FB
CPUGT_RTN
CPUGT_IMON
CPUGT_NTC
CPUSA_FCCM
CPUSA_PWM
CPUSA_ISUMP
CPUSA_ISUMN_R
CPUSA_COMP
CPUSA_FB
CPUSA_RTN
CPUSA_IMON
CPUVR_PROG1
CPUVR_PROG2
CPUVR_PROG3
CPUVR_PROG4
CPUVR_PROG5
CPUCORE_FCCM
CPUCORE_PWM1
CPUCORE_PWM2
NC
CPUCORE_ISUMP
CPUCORE_ISUMN_R
CPUCORE_ISEN1
CPUCORE_ISEN2
CPUCORE_COMP
CPUCORE_FB
CPUCORE_RTN
CPUCORE_IMON
CPUCORE_NTC
CPU_VR_PROCHOT_L
CPUVR_PGOOD
CPU_VR_EN
R7111 110K
R7112 63.4K
R7113 1.87K
R7114 182K
R7115 100K
R7106 100
SMC_PROCHOT_L
R7107 0
ALL_SYS_PWRGD_R
PP1V_S3
R7103 100
R7105 45.3
CPUVR_VIDSOUT
R7102 10
CPU_VIDSOUT
CPU_VIDALERT_L
CPUVR_VIDSCLK
R7104 49.9
CPU_VIDSCLK
R7103.2: PLACE_NEAR=U7100.43:5.08mm
R7105.2: PLACE_NEAR=U7100.45:5.08mm
C7131 220PF
CPUCORE_ISUMP
CPUCORE_ISUMN
CPUCORE_ISUMN_R
R7130 301
C7130 3300PF
CPUCORE_ISUMN_RC
R7131 1K
C7133 0.01UF
CPUCORE_ISEN1
C7134 0.01UF
CPUCORE_ISEN2
C7132 0.01UF
C7155 82PF
CPUGT_COMP
C7156 0.01UF
CPUGT_COMP_RC
R7155 3.40K
C7135 82PF
CPUCORE_COMP
R7135 3.40K
CPUCORE_COMP_RC
C7136 0.01UF
R7157 69.8K
CPUGT_IMON
C7157 220PF
R7137 84.5K
CPUCORE_IMON
C7137 150PF
R7158 12.1K
CPUGT_NTC_R
CPUGT_NTC
R7159 220KOHM-3%
Alert, min = 99C
Hot, min = 105C
XW7159
CPUGT_NTC_XW
R7138 12.1K
CPUCORE_NTC
CPUCORE_NTC_R
R7139 220KOHM-3%
XW7139
CPUCORE_NTC_XW
C7175 82PF
CPUSA_COMP
R7175 2.74K
CPUSA_COMP_RC
C7176 0.01UF
PP1V8_S5
R7108 100K
BJT: Still applicable?
rdar://problem/31759230
CPUVR_PGOOD
MAKE_BASE=TRUE
R7177 95.3K
CPUSA_IMON
C7177 150PF
CPU_VCCSASENSE_P
R7162 0
CPUSA_SENSE_P_R
R7163 1.87K
CPUSA_FB
C7161 330PF
C7164 470PF
CPUSA_SENSE_P_RC
R7164 1K
R7165 560
CPUSA_FB_RC
C7163 1000PF
XW7160
CPU_VCCSASENSE_N
CPUSA_RTN
C7162 330PF
C7171 220PF
CPUSA_ISUMP
CPUSA_ISUMN
R7170 402
CPUSA_ISUMN_R
R7171 1K
CPUSA_ISUMN_RC
C7170 3300PF
C7172 0.01UF
BOM_COST_GROUP=CPU & CHIPSET
SYNC_MASTER=J122_MLB
SYNC_DATE=03/30/2018
PAGE TITLE
CPU IMVP8 Regulator IC
Apple Inc.
DRAWING NUMBER
051-04039
SIZE
D
REVISION
2.0.0
BRANCH
PAGE
71 OF 145
SHEET
59 OF 85
NOTICE OF PROPRIETARY PROPERTY:
THE INFORMATION CONTAINED HEREIN IS THE PROPRIETARY PROPERTY OF APPLE INC.
THE POSESSOR AGREES TO THE FOLLOWING:
I TO MAINTAIN THIS DOCUMENT IN CONFIDENCE
II NOT TO REPRODUCE OR COPY IT
III NOT TO REVEAL OR PUBLISH IT IN WHOLE OR PART
IV ALL RIGHTS RESERVED
苹果最新图纸

Note:Vcore design requires 4x POSCAPs
3x shared from other VRs

CPU VCORE

Phase 1

PPBUS_HS_CPU

CRITICAL C7210 33UF 20% 16V TANT CASED12-SM

C7214 2.2UF 20% 25V X6S-CERM 0402

C7215 2.2UF 20% 25V X6S-CERM 0402

PP5V_S0_CPUCORE1
MIN_LINE_WIDTH=0.2000
MIN_NECK_WIDTH=0.2000
VOLTAGE=5V

R7217 2.2 1% 1/20W MF 201

PP5V_G3S

C7217 2.2UF 20% 25V X6S-CERM 0402

C7216 2.2UF 20% 25V X6S-CERM 0402

U7210 SIC535CD MLP4535

VIN, VCIN, VDRV, ZCD_EN*, PWM, NC, BOOT, PHASE, VSWH, GL, PGND, CGND

CPUCORE_FCCM

CPUCORE_PWM1

CPUCORE_BOOT1_R
MIN_LINE_WIDTH=0.2000
MIN_NECK_WIDTH=0.2000
DIDT=TRUE

R7219 0 5% 1/16W MF-LF 402

C7219 0.22UF 10% 25V X7R 0402

CPUCORE_BOOT1
MIN_LINE_WIDTH=0.2000
MIN_NECK_WIDTH=0.2000
DIDT=TRUE

CPUCORE_BOOT1_RC
MIN_LINE_WIDTH=0.2000
MIN_NECK_WIDTH=0.2000
DIDT=TRUE

CPUCORE_PHASE1
MIN_LINE_WIDTH=0.6000
MIN_NECK_WIDTH=0.2000
DIDT=TRUE
SWITCH_NODE=TRUE

CPUCORE_GL1

P3MM SM PP7210

XW7210 SM

GND_CPUCORE1_CGND
MIN_LINE_WIDTH=0.2000
MIN_NECK_WIDTH=0.2000
VOLTAGE=0V

CRITICAL L7210 0.22UH-20%-25A-0.0045OHM PILE052T-SM1-COMBO 152S01013

PPVCORE_S0_CPU_PH1
MIN_LINE_WIDTH=0.6000
MIN_NECK_WIDTH=0.2000
VOLTAGE=1.5V

CRITICAL R7210 0.001 1% 1W MF-3 0612

CPUCORE_ISNS1_P

CPUCORE_ISNS1_N

NO_XNET_CONNECTION=1 R7214 2.2 1% 1/20W MF 201 CPUCORE_ISUMN

NO_XNET_CONNECTION=1 R7211 1K 1% 1/20W MF 201

NO_XNET_CONNECTION=1 R7212 200K 1% 1/20W MF 201

R7213 200K 1% 1/20W MF 201 CPUCORE_ISNS2_N

NO_XNET_CONNECTION=1

CPUCORE_ISEN1

CPUCORE_ISUMP

PPVCC_S0_CPU

Vout Max = 1.52V
Iout Max = 28A
f = 750kHz

CPU VCORE

Phase 2

PPBUS_HS_CPU

CRITICAL C7230 33UF 20% 16V TANT CASED12-SM

C7234 2.2UF 20% 25V X6S-CERM 0402

C7235 2.2UF 20% 25V X6S-CERM 0402

PP5V_S0_CPUCORE2
MIN_LINE_WIDTH=0.2000
MIN_NECK_WIDTH=0.2000
VOLTAGE=5V

R7237 2.2 1% 1/20W MF 201

PP5V_G3S

C7237 2.2UF 20% 25V X6S-CERM 0402

C7236 2.2UF 20% 25V X6S-CERM 0402

U7230 SIC535CD MLP4535

VIN, VCIN, VDRV, ZCD_EN*, PWM, NC, BOOT, PHASE, VSWH, GL, PGND, CGND

CPUCORE_FCCM

CPUCORE_PWM2

CPUCORE_BOOT2_R
MIN_LINE_WIDTH=0.2000
MIN_NECK_WIDTH=0.2000
DIDT=TRUE

R7239 0 5% 1/16W MF-LF 402

C7239 0.22UF 10% 25V X7R 0402

CPUCORE_BOOT2
MIN_LINE_WIDTH=0.2000
MIN_NECK_WIDTH=0.2000
DIDT=TRUE

CPUCORE_BOOT2_RC
MIN_LINE_WIDTH=0.2000
MIN_NECK_WIDTH=0.2000
DIDT=TRUE

CPUCORE_PHASE2
MIN_LINE_WIDTH=0.6000
MIN_NECK_WIDTH=0.2000
DIDT=TRUE
SWITCH_NODE=TRUE

CPUCORE_GL2

P3MM SM PP7230

XW7230 SM

GND_CPUCORE2_CGND
MIN_LINE_WIDTH=0.2000
MIN_NECK_WIDTH=0.2000
VOLTAGE=0V

CRITICAL L7230 0.22UH-20%-25A-0.0045OHM PILE052T-SM1-COMBO 152S01013

PPVCORE_S0_CPU_PH2
MIN_LINE_WIDTH=0.6000
MIN_NECK_WIDTH=0.2000
VOLTAGE=1.5V

CRITICAL R7230 0.001 1% 1W MF-3 0612

CPUCORE_ISNS2_P

CPUCORE_ISNS2_N

NO_XNET_CONNECTION=1 R7234 2.2 1% 1/20W MF 201 CPUCORE_ISUMN

NO_XNET_CONNECTION=1 R7231 1K 1% 1/20W MF 201

NO_XNET_CONNECTION=1 R7232 200K 1% 1/20W MF 201

R7233 200K 1% 1/20W MF 201 CPUCORE_ISNS1_N

NO_XNET_CONNECTION=1

CPUCORE_ISEN2

CPUCORE_ISUMP

CPU VCCSA

PP5V_G3S

C7296 2.2UF 20% 25V X6S-CERM 0402

U7290 ISL6208F DFN

VCC, PWM, FCCM, BOOT, UGATE, PHASE, LGATE, GND, THRM PAD

CPUSA_PWM

CPUSA_FCCM

CPUSA_BOOT
MIN_LINE_WIDTH=0.2000
MIN_NECK_WIDTH=0.2000
DIDT=TRUE

CPUSA_UGATE
MIN_LINE_WIDTH=0.4000
MIN_NECK_WIDTH=0.2000
DIDT=TRUE
GATE_NODE=TRUE

CPUSA_PHASE
MIN_LINE_WIDTH=0.2000
MIN_NECK_WIDTH=0.2000
DIDT=TRUE
SWITCH_NODE=TRUE

CPUSA_LGATE
MIN_LINE_WIDTH=0.4000
MIN_NECK_WIDTH=0.2000
DIDT=TRUE
GATE_NODE=TRUE

R7297 2.2 5% 1/16W MF-LF 402 CPUSA_UGATE_R

R7298 1 5% 1/16W MF-LF 402 CPUSA_LGATE_R

PPBUS_HS_CPU

CRITICAL C7290 33UF 20% 16V TANT CASED12-SM

C7294 2.2UF 20% 25V X6S-CERM 0402

C7295 2.2UF 20% 25V X6S-CERM 0402

CPUSA_BOOT_R
MIN_LINE_WIDTH=0.2000
MIN_NECK_WIDTH=0.2000
DIDT=TRUE

R7299 1 5% 1/16W MF-LF 402

C7299 0.22UF 10% 25V X7R 0402

CRITICAL Q7291 CSD58873Q3D Q3D

VIN, TG, TGR, VSW, BG, PGND

CPUSA_SW_LL
MIN_LINE_WIDTH=0.4000
MIN_NECK_WIDTH=0.2000
DIDT=TRUE
SWITCH_NODE=TRUE

R7293 2.2 5% 1/16W MF-LF 402

CPUSA_SNUBR
MIN_LINE_WIDTH=0.1160
MIN_NECK_WIDTH=0.0600
DIDT=TRUE
SWITCH_NODE=TRUE

C7293 100PF 5% 50V C0G 0402

152S00356

CRITICAL L7290 0.47UH-20%-8.5A-0.035OHM MHCI03020-SM

PPVCCSA_S0_CPU_R
MIN_LINE_WIDTH=0.6000
MIN_NECK_WIDTH=0.2000
VOLTAGE=1.5V

CRITICAL R7290 0.003 1% 1W CYN 0612

CPUSA_ISNS_P

CPUSA_ISNS_N

NO_XNET_CONNECTION=1 R7291 1K 1% 1/20W MF 201

NO_XNET_CONNECTION=1 R7292 0 5% 1/20W MF 0201

CPUSA_ISUMN

CPUSA_ISUMP

XW7290 SHORT-12L-1.25MM-SM

PLACE_NEAR=R7290:5MM

PPVCCSA_S0_CPUDDR

PPVCCSA_S0_CPU

Vout Max = 1.52V
Iout Max = 4.1A
f = 750kHz

苹果最新图纸

VINAFIX.COM

BOM_COST_GROUP=CPU & CHIPSET

SYNC_MASTER=J122_MLB SYNC_DATE=03/30/2018

PAGE TITLE: CPU VCore/VccSA Power Stage

Apple Inc.

DRAWING NUMBER: 051-04039 SIZE: D

REVISION: 2.0.0

BRANCH

PAGE: 72 OF 145

SHEET: 60 OF 85

NOTICE OF PROPRIETARY PROPERTY:
THE INFORMATION CONTAINED HEREIN IS THE PROPRIETARY PROPERTY OF APPLE INC.
THE POSESSOR AGREES TO THE FOLLOWING:
I TO MAINTAIN THIS DOCUMENT IN CONFIDENCE
II NOT TO REPRODUCE OR COPY IT
III NOT TO REVEAL OR PUBLISH IT IN WHOLE OR PART
IV ALL RIGHTS RESERVED

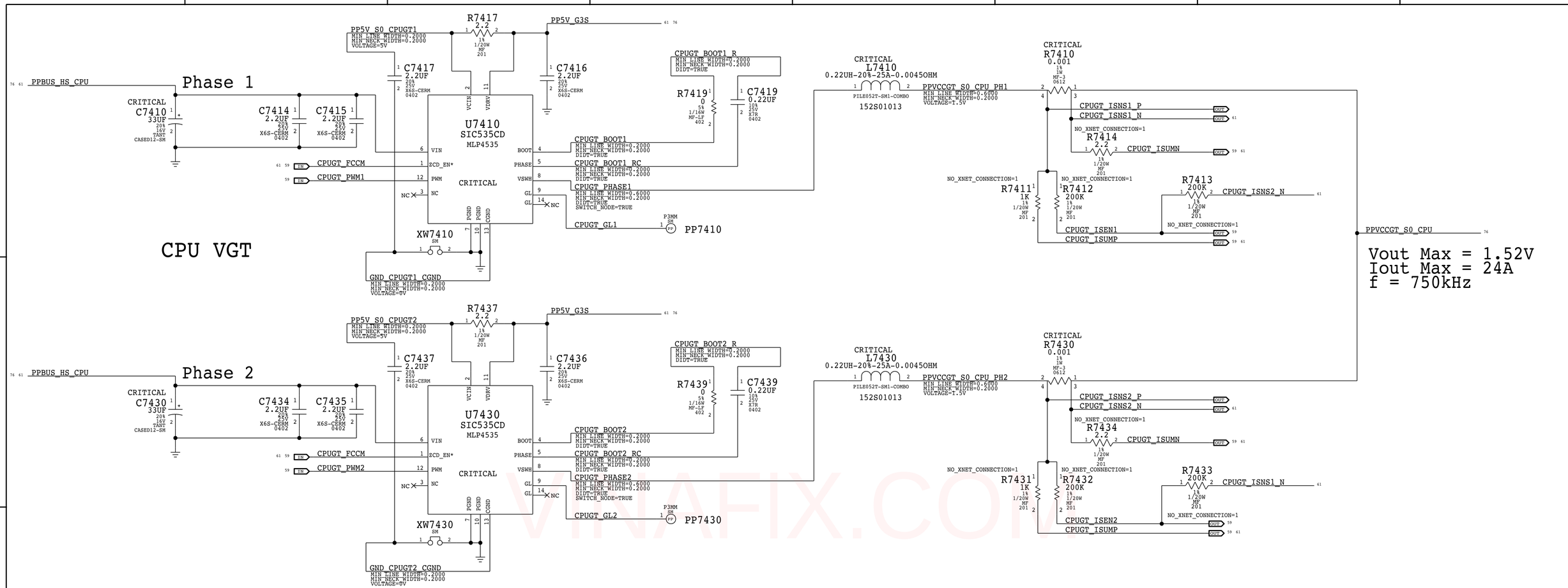

VINAFIX.COM

苹果最新图纸

BOM_COST_GROUP=CPU & CHIPSET

SYNC_MASTER=J122_MLB SYNC_DATE=03/30/2018

PAGE TITLE
CPU VccGT Power Stage

Apple Inc.

DRAWING NUMBER 051-04039 SIZE D

REVISION 2.0.0

BRANCH

PAGE 74 OF 145

SHEET 61 OF 85

NOTICE OF PROPRIETARY PROPERTY:
THE INFORMATION CONTAINED HEREIN IS THE PROPRIETARY PROPERTY OF APPLE INC.
THE POSESSOR AGREES TO THE FOLLOWING:
I TO MAINTAIN THIS DOCUMENT IN CONFIDENCE
II NOT TO REPRODUCE OR COPY IT
III NOT TO REVEAL OR PUBLISH IT IN WHOLE OR PART
IV ALL RIGHTS RESERVED

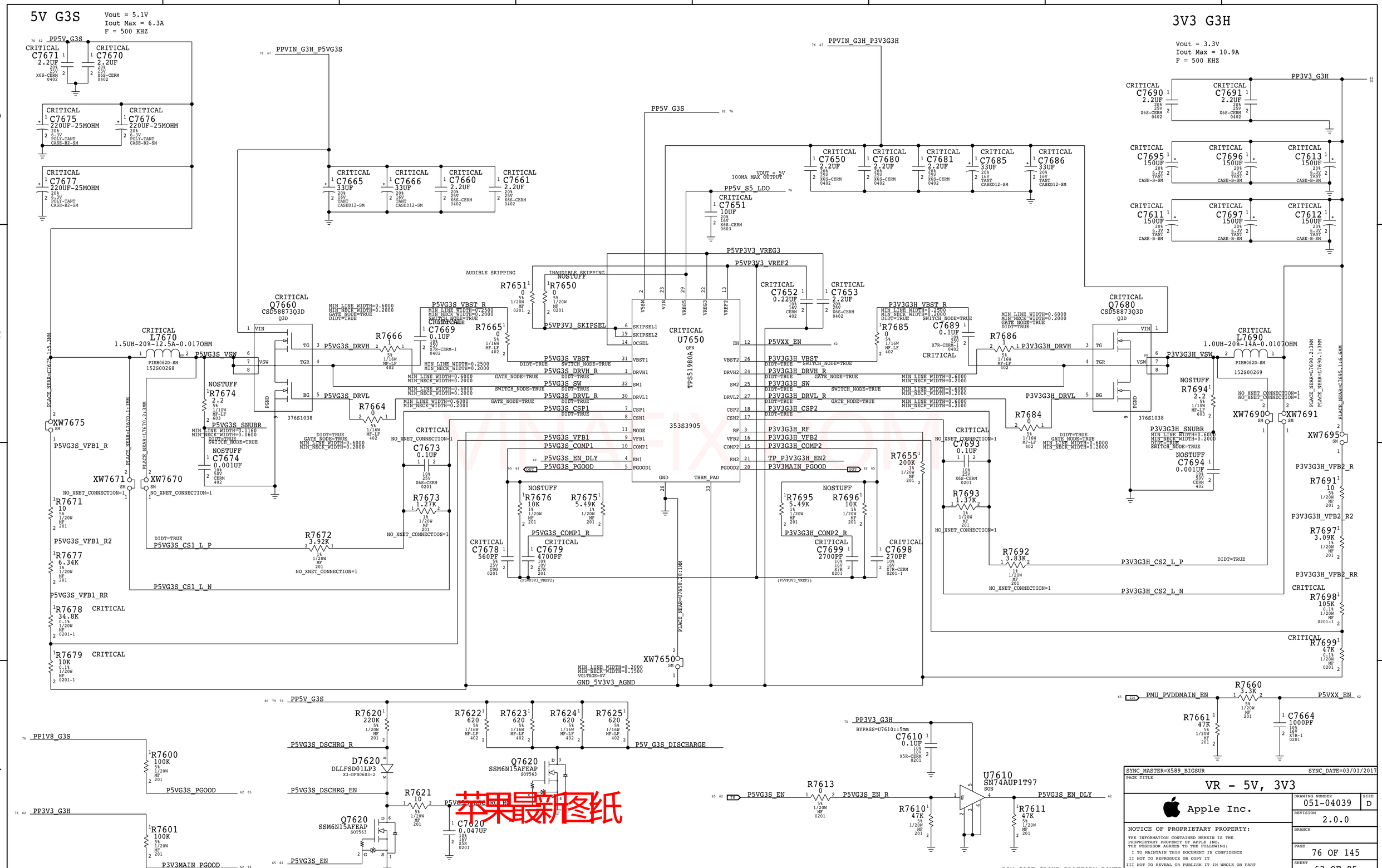
5V G3S
Vout = 5.1V
Iout Max = 6.3A
F = 500 KHZ
3V3 G3H
Vout = 3.3V
Iout Max = 10.9A
F = 500 KHZ
PP5V_G3S
PPVIN_G3H_P5VG3S
PPVIN_G3H_P3V3G3H
PP3V3_G3H
PP5V_S5_LDO
VOUT = 5V
100MA MAX OUTPUT
P5VP3V3_VREG3
P5VP3V3_VREF2
P5VP3V3_SKIPSEL
AUDIBLE SKIPPING
INAUDIBLE SKIPPING
NOSTUFF
CRITICAL
U7650
TPS51980A
QFN
353S3905
Q7660
CSD58873Q3D
Q3D
Q7680
L7670
1.5UH-20%-12.5A-0.017OHM
PIMB062D-SM
152S00268
L7690
1.0UH-20%-14A-0.0107OHM
152S00269
376S1038
P5VG3S_VSW
P3V3G3H_VSW
P5VG3S_DRVH
P5VG3S_DRVL
P3V3G3H_DRVH
P3V3G3H_DRVL
P5VG3S_VBST_R
P3V3G3H_VBST_R
P5VG3S_VBST
P5VG3S_DRVH_R
P5VG3S_SW
P5VG3S_DRVL_R
P5VG3S_CSP1
P5VG3S_VFB1
P5VG3S_COMP1
P5VG3S_EN_DLY
P5VG3S_PGOOD
P5VXX_EN
P3V3G3H_VBST
P3V3G3H_DRVH_R
P3V3G3H_SW
P3V3G3H_DRVL_R
P3V3G3H_CSP2
P3V3G3H_RF
P3V3G3H_VFB2
P3V3G3H_COMP2
TP_P3V3G3H_EN2
P3V3MAIN_PGOOD
P5VG3S_SNUBR
P3V3G3H_SNUBR
P5VG3S_VFB1_R
P5VG3S_VFB1_R2
P5VG3S_VFB1_RR
P5VG3S_CS1_L_P
P5VG3S_CS1_L_N
P5VG3S_COMP1_R
P3V3G3H_CS2_L_P
P3V3G3H_CS2_L_N
P3V3G3H_COMP2_R
P3V3G3H_VFB2_R
P3V3G3H_VFB2_R2
P3V3G3H_VFB2_RR
GND_5V3V3_AGND
PP1V8_G3S
PP3V3_G3H
P3V3MAIN_PGOOD
P5VG3S_DSCHRG_R
P5VG3S_DSCHRG_EN
P5VG3S_EN
P5V_G3S_DISCHARGE
D7620
DLLFSD01LP3
X3-DFN0603-2
Q7620
SSM6N15AFEAP
SOT563
苹果最新图纸
PMU_PVDDMAIN_EN
P5VXX_EN
P5VG3S_EN
P5VG3S_EN_R
P5VG3S_EN_DLY
U7610
SN74AUP1T97
SON
BYPASS=U7610:5mm
BOM_COST_GROUP=PLATFORM POWER
SYNC_MASTER=X589_BIGSUR
SYNC_DATE=03/01/2017
PAGE TITLE
VR - 5V, 3V3
Apple Inc.
DRAWING NUMBER
051-04039
SIZE
D
REVISION
2.0.0
BRANCH
PAGE
76 OF 145
SHEET
62 OF 85
NOTICE OF PROPRIETARY PROPERTY:
THE INFORMATION CONTAINED HEREIN IS THE PROPRIETARY PROPERTY OF APPLE INC.
THE POSESSOR AGREES TO THE FOLLOWING:
I TO MAINTAIN THIS DOCUMENT IN CONFIDENCE
II NOT TO REPRODUCE OR COPY IT
III NOT TO REVEAL OR PUBLISH IT IN WHOLE OR PART
IV ALL RIGHTS RESERVED

Note : Design based on Calpe ERS - D2449-A0-110-00_0v3.pdf (Radar# 24696002)
System Block Diagram - T290 Power System Architecture . v9
Optimize componentS for individual projects based on EDP(A)

PP3V3_G3H_PMU_VDDMAIN

Resistor Divider from PBUS
VDD_HI < 3.1V

PMU_VDD_HI

PP1V8_SLPS2R_PMUVDDGPIO
MIN_LINE_WIDTH=0.2000
MIN_NECK_WIDTH=0.0800
VOLTAGE=1.8V

C7800 0.1UF 10% 6.3V X6S 0201 CRITICAL

U7800
CALPE-PMU
BGA
SYM 2 OF 4

CRITICAL
OMIT_TABLE

Note : All Bucks are default Local Sense
Buck 0,2,7,9 and 10 need to have option for Remote Sense for Future Use.

Vout = 1V (0.7V in LPM)
Iout Max = 1.1A
F = 3MHz

PPVCC_PRIM_CORE

Vout = 1V
Iout Max = 3.05A
F = 3MHz

PP1V_PRIM

Vout = 0.9V
Iout Max = 1.4A
F = 3MHz

PP0V9_SSD

Vout = 1.8V
Iout Max = 1.3A
F = 3MHz

PP1V8_SSD

L7819 0.47UH-20%-4.8A-0.034OHM
L7820 0.47UH-20%-4.8A-0.034OHM
L7821 0.47UH-20%-4.8A-0.034OHM
L7822 0.47UH-20%-4.8A-0.034OHM
L7823 0.47UH-20%-4.8A-0.034OHM
L7824 0.47UH-20%-4.8A-0.034OHM

L7806 1UH-20%-3.8A-0.055OHM
L7807 0.22UH-20%-6.7A-0.023OHM
L7808 0.22UH-20%-6.7A-0.023OHM
L7809 0.22UH-20%-6.7A-0.023OHM

Vout = 0.625V - 1.06V
Iout Max = 12.5A
F = 2MHz & 4MHz

PPVDDCPU_AWAKE

L7810 1.0UH-20%-2.6A-0.095OHM

Vout = 0.8V - 1.06V
Iout Max = 0.923A
F = 3MHz

PPVDDCPUSRAM_AWAKE

L7811 1UH-20%-4.7A-0.040HM
L7812 0.47UH-20%-4.8A-0.034OHM

Vout = 0.82V
Iout Max = 3.93A
F = 3MHz

PP0V82_SLPDDR

L7813 1UH-20%-3.8A-0.055OHM

Vout = 1.8V
Iout Max = 1.5A
F = 3MHz

PP1V8_SLPS2R

L7814 1UH-20%-3.8A-0.055OHM
L7815 0.47UH-20%-4.8A-0.034OHM

Vout = 1.1V
Iout Max = 1.4A
F = 3MHz

PP1V1_SLPS2R

L7816 1UH-20%-3.8A-0.055OHM
L7817 0.47UH-20%-4.8A-0.034OHM

Vout = 0.9V
Iout Max = 2.64A
F = 3MHz

PP0V9_SLPDDR

Supplied Current

BUCK3_SW1	T8	PP1V8_AWAKE	0.3A
BUCK3_SW2	T11	PP1V8_SLPS2R_PMUVDDGPIO	0.3A
BUCK3_SW3	V11	PP1V8_S5	1.0A
BUCK3_SW4	V8	PP1V8_S3	1.0A
BUCK3_SW5	R8	TP_PMU_BUCK3SW5	
BUCK4_SW1	P6	TP_PP1V1_PMU_BUCK4SW1	
BUCK6_SW1	R6	TP_PMU_BUCK6SW1	
BUCK8_SW1	P13	PP1V_S0SW	
BUCK8_SW2	R13	PP1V_S3	0.3A

BOM_COST_GROUP=T290

VNAFIX.COM
主板最新图纸

SYNC_MASTER=X589_BIGSUR SYNC_DATE=03/16/2017

PAGE TITLE
PMIC BUCKS AND SWs

Apple Inc.

DRAWING NUMBER 051-04039 SIZE D
REVISION 2.0.0
BRANCH
PAGE 78 OF 145
SHEET 63 OF 85

NOTICE OF PROPRIETARY PROPERTY:
THE INFORMATION CONTAINED HEREIN IS THE PROPRIETARY PROPERTY OF APPLE INC.
THE POSESSOR AGREES TO THE FOLLOWING:
I TO MAINTAIN THIS DOCUMENT IN CONFIDENCE
II NOT TO REPRODUCE OR COPY IT
III NOT TO REVEAL OR PUBLISH IT IN WHOLE OR PART
IV ALL RIGHTS RESERVED

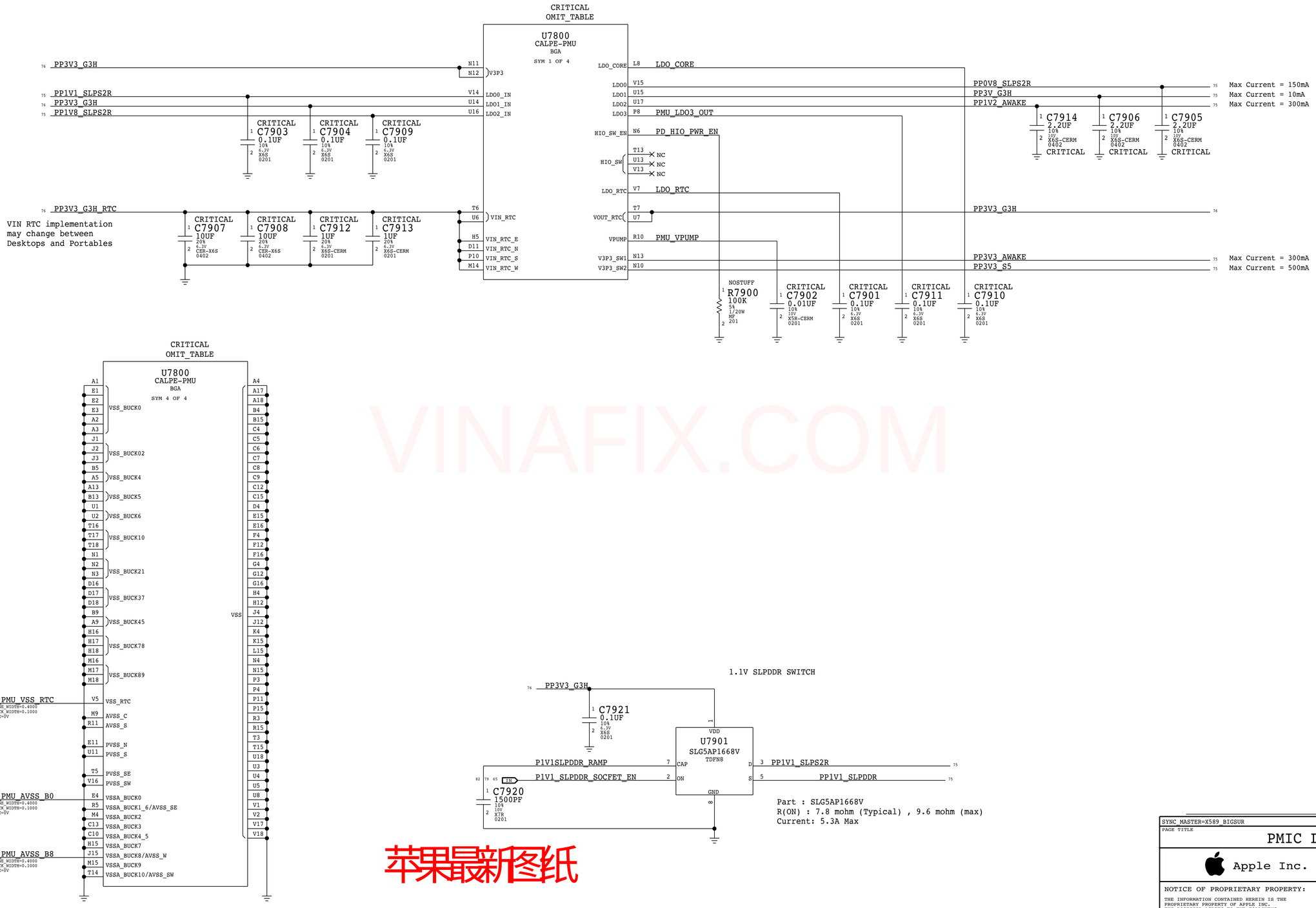

VINAFIX.COM

苹果最新图纸

BOM_COST_GROUP=T290

SYNC_MASTER=X589_BIGSUR SYNC_DATE=03/16/2017

PAGE TITLE
PMIC LDOs

Apple Inc.

DRAWING NUMBER 051-04039 SIZE D
REVISION 2.0.0
BRANCH
PAGE 79 OF 145
SHEET 64 OF 85

NOTICE OF PROPRIETARY PROPERTY:
THE INFORMATION CONTAINED HEREIN IS THE PROPRIETARY PROPERTY OF APPLE INC.
THE POSESSOR AGREES TO THE FOLLOWING:
I TO MAINTAIN THIS DOCUMENT IN CONFIDENCE
II NOT TO REPRODUCE OR COPY IT
III NOT TO REVEAL OR PUBLISH IT IN WHOLE OR PART
IV ALL RIGHTS RESERVED

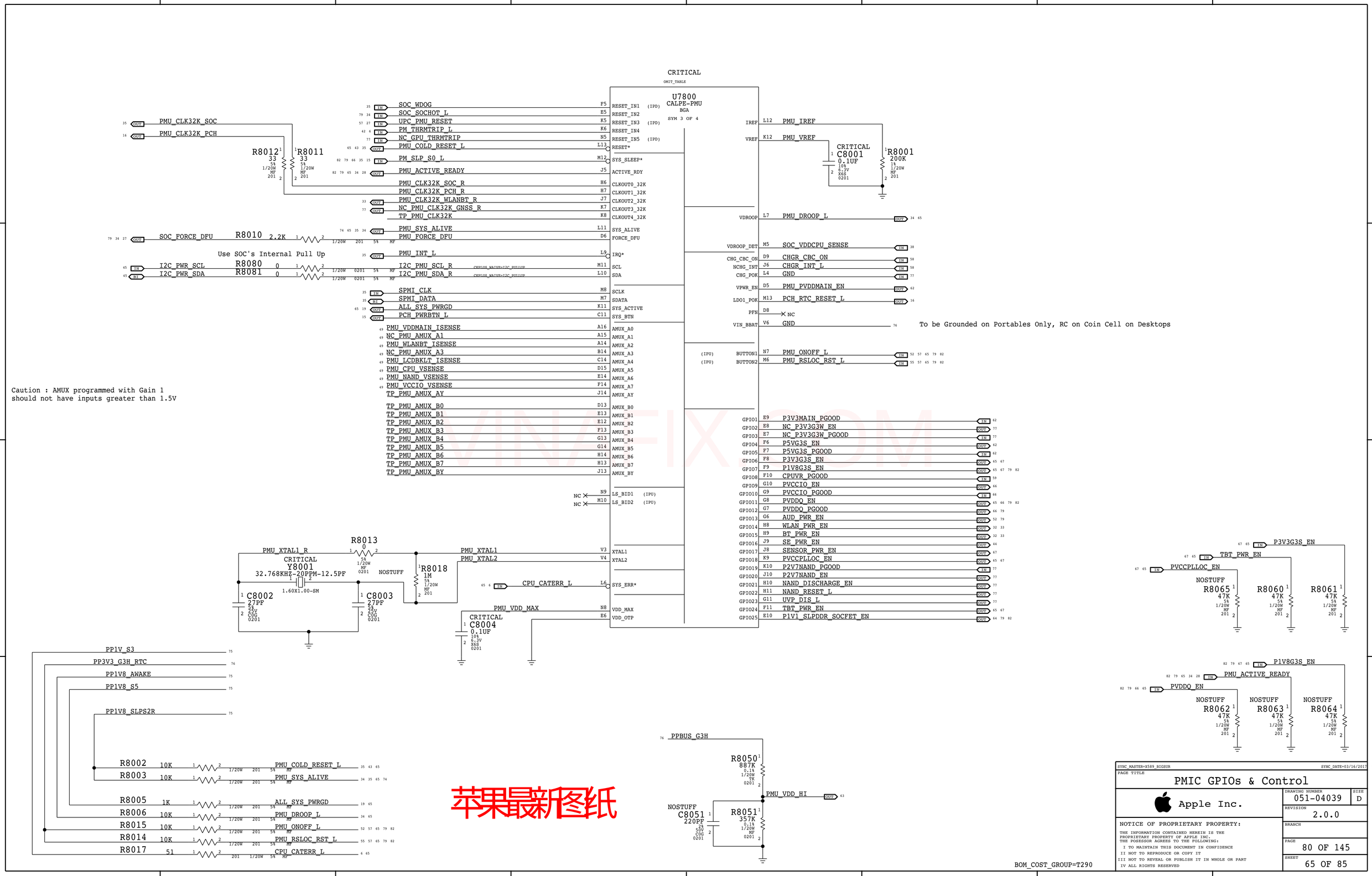
CRITICAL
OMIT_TABLE
U7800
CALPE-PMU
BGA
SYM 3 OF 4
PMU_CLK32K_SOC
PMU_CLK32K_PCH
R8012 33 5% 1/20W MF 201
R8011 33 5% 1/20W MF 201
SOC_WDOG
SOC_SOCHOT_L
UPC_PMU_RESET
PM_THRMTRIP_L
NC_GPU_THRMTRIP
PMU_COLD_RESET_L
PM_SLP_S0_L
PMU_ACTIVE_READY
PMU_CLK32K_SOC_R
PMU_CLK32K_PCH_R
PMU_CLK32K_WLANBT_R
NC_PMU_CLK32K_GNSS_R
TP_PMU_CLK32K
PMU_SYS_ALIVE
PMU_FORCE_DFU
SOC_FORCE_DFU
R8010 2.2K 1/20W 201 5% MF
Use SOC's Internal Pull Up
PMU_INT_L
I2C_PWR_SCL
I2C_PWR_SDA
R8080 0 1/20W 0201 5% MF
R8081 0 1/20W 0201 5% MF
I2C_PMU_SCL_R
I2C_PMU_SDA_R
SPMI_CLK
SPMI_DATA
ALL_SYS_PWRGD
PCH_PWRBTN_L
PMU_VDDMAIN_ISENSE
NC_PMU_AMUX_A1
PMU_WLANBT_ISENSE
NC_PMU_AMUX_A3
PMU_LCDBKLT_ISENSE
PMU_CPU_VSENSE
PMU_NAND_VSENSE
PMU_VCCIO_VSENSE
TP_PMU_AMUX_AY
TP_PMU_AMUX_B0
TP_PMU_AMUX_B1
TP_PMU_AMUX_B2
TP_PMU_AMUX_B3
TP_PMU_AMUX_B4
TP_PMU_AMUX_B5
TP_PMU_AMUX_B6
TP_PMU_AMUX_B7
TP_PMU_AMUX_BY
NC
NC
PMU_IREF
PMU_VREF
CRITICAL C8001 0.1UF 10% 6.3V X6S 0201
R8001 200K 1% 1/20W MF 201
PMU_DROOP_L
SOC_VDDCPU_SENSE
CHGR_CBC_ON
CHGR_INT_L
GND
PMU_PVDDMAIN_EN
PCH_RTC_RESET_L
NC
GND
To be Grounded on Portables Only, RC on Coin Cell on Desktops
PMU_ONOFF_L
PMU_RSLOC_RST_L
P3V3MAIN_PGOOD
NC_P3V3G3W_EN
NC_P3V3G3W_PGOOD
P5VG3S_EN
P5VG3S_PGOOD
P3V3G3S_EN
P1V8G3S_EN
CPUVR_PGOOD
PVCCIO_EN
PVCCIO_PGOOD
PVDDQ_EN
PVDDQ_PGOOD
AUD_PWR_EN
WLAN_PWR_EN
BT_PWR_EN
SE_PWR_EN
SENSOR_PWR_EN
PVCCPLLOC_EN
P2V7NAND_PGOOD
P2V7NAND_EN
NAND_DISCHARGE_EN
NAND_RESET_L
UVP_DIS_L
TBT_PWR_EN
P1V1_SLPDDR_SOCFET_EN
Caution : AMUX programmed with Gain 1
should not have inputs greater than 1.5V
R8013 0 5% 1/20W MF 0201
PMU_XTAL1_R
CRITICAL Y8001 32.768KHZ-20PPM-12.5PF 1.60X1.00-SM
NOSTUFF
C8002 27PF 5% 25V C0G 0201
C8003 27PF 5% 25V C0G 0201
R8018 1M 5% 1/20W MF 201
PMU_XTAL1
PMU_XTAL2
CPU_CATERR_L
PMU_VDD_MAX
CRITICAL C8004 0.1UF 10% 6.3V X6S 0201
P3V3G3S_EN
TBT_PWR_EN
PVCCPLLOC_EN
NOSTUFF R8065 47K 5% 1/20W MF 201
R8060 47K 5% 1/20W MF 201
R8061 47K 5% 1/20W MF 201
P1V8G3S_EN
PMU_ACTIVE_READY
PVDDQ_EN
NOSTUFF R8062 47K 5% 1/20W MF 201
NOSTUFF R8063 47K 5% 1/20W MF 201
NOSTUFF R8064 47K 5% 1/20W MF 201
PP1V_S3
PP3V3_G3H_RTC
PP1V8_AWAKE
PP1V8_S5
PP1V8_SLPS2R
R8002 10K 1/20W 201 5% MF PMU_COLD_RESET_L
R8003 10K 1/20W 201 5% MF PMU_SYS_ALIVE
R8005 1K 1/20W 201 5% MF ALL_SYS_PWRGD
R8006 10K 1/20W 201 5% MF PMU_DROOP_L
R8015 10K 1/20W 201 5% MF PMU_ONOFF_L
R8014 10K 1/20W 201 5% MF PMU_RSLOC_RST_L
R8017 51 1/20W 201 5% MF CPU_CATERR_L
PPBUS_G3H
R8050 887K 0.1% 1/20W TK 0201
PMU_VDD_HI
NOSTUFF C8051 220PF 5% 50V C0G 0201
R8051 357K 0.1% 1/20W MF 0201
苹果最新图纸
BOM_COST_GROUP=T290
SYNC_MASTER=X589_BIGSUR
SYNC_DATE=03/16/2017
PAGE TITLE
PMIC GPIOs & Control
Apple Inc.
DRAWING NUMBER 051-04039
SIZE D
REVISION 2.0.0
BRANCH
PAGE 80 OF 145
SHEET 65 OF 85
NOTICE OF PROPRIETARY PROPERTY:
THE INFORMATION CONTAINED HEREIN IS THE PROPRIETARY PROPERTY OF APPLE INC.
THE POSESSOR AGREES TO THE FOLLOWING:
I TO MAINTAIN THIS DOCUMENT IN CONFIDENCE
II NOT TO REPRODUCE OR COPY IT
III NOT TO REVEAL OR PUBLISH IT IN WHOLE OR PART
IV ALL RIGHTS RESERVED

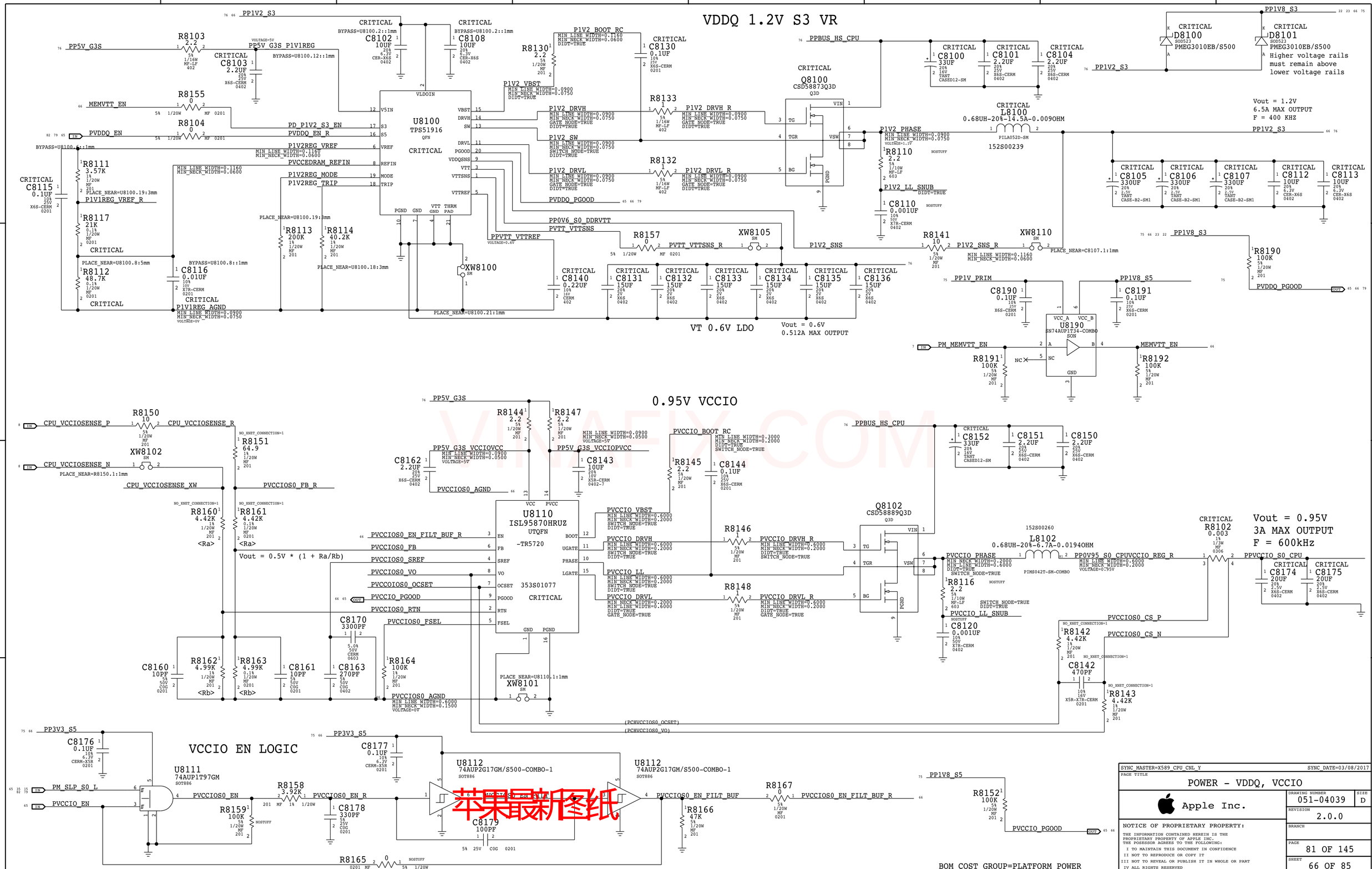

SYNC_MASTER=X589_CPU_CNL_Y SYNC_DATE=03/08/2017

PAGE TITLE

POWER - VDDQ, VCCIO

Apple Inc.

DRAWING NUMBER 051-04039 SIZE D

REVISION 2.0.0

BRANCH

PAGE 81 OF 145

SHEET 66 OF 85

NOTICE OF PROPRIETARY PROPERTY:
THE INFORMATION CONTAINED HEREIN IS THE PROPRIETARY PROPERTY OF APPLE INC.
THE POSESSOR AGREES TO THE FOLLOWING:
I TO MAINTAIN THIS DOCUMENT IN CONFIDENCE
II NOT TO REPRODUCE OR COPY IT
III NOT TO REVEAL OR PUBLISH IT IN WHOLE OR PART
IV ALL RIGHTS RESERVED

1.2V S0SW VCCPLL_OC Switch

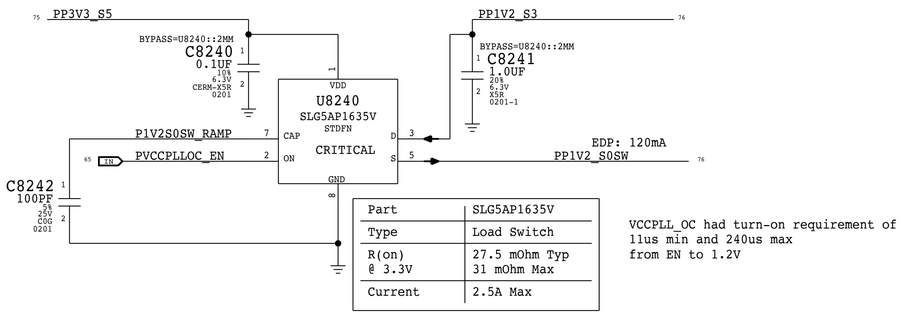

Part	SLG5AP1635V
Type	Load Switch
R(on) @ 3.3V	27.5 mOhm Typ 31 mOhm Max
Current	2.5A Max

VCCPLL_OC had turn-on requirement of
11us min and 240us max
from EN to 1.2V

3.3V G3 Standby Switch

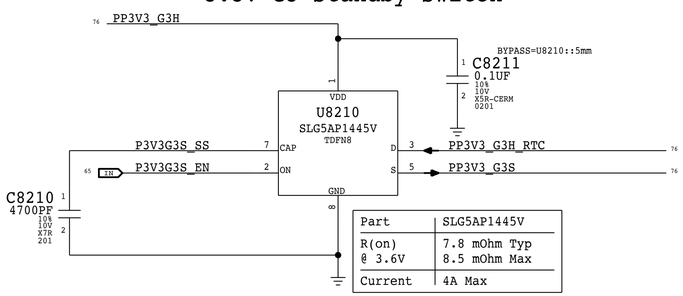

Part	SLG5AP1445V
R(on) @ 3.6V	7.8 mOhm Typ 8.5 mOhm Max
Current	4A Max

EG: Check load current & shrink switch?

1.8V G3 Standby Switch

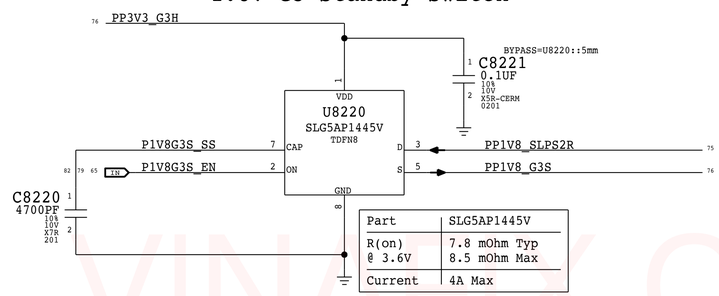

Part	SLG5AP1445V
R(on) @ 3.6V	7.8 mOhm Typ 8.5 mOhm Max
Current	4A Max

3.3V Sensors Switch

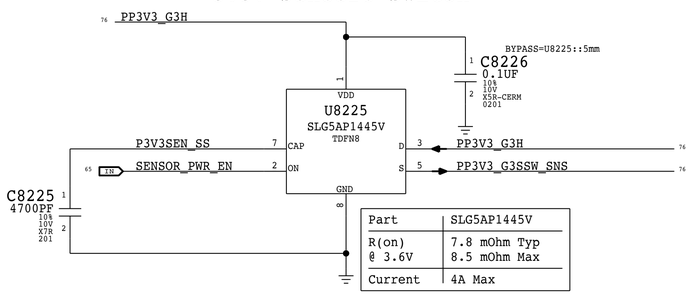

Part	SLG5AP1445V
R(on) @ 3.6V	7.8 mOhm Typ 8.5 mOhm Max
Current	4A Max

3.3V S0SW TBT Switch

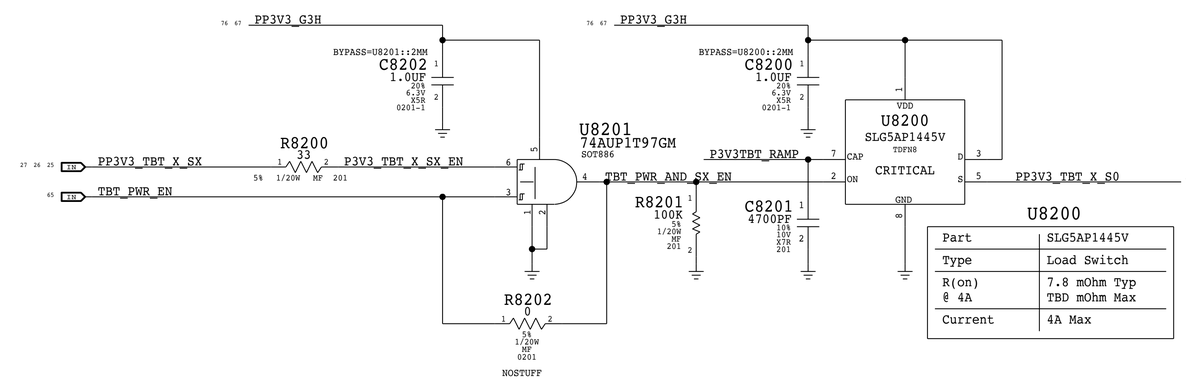

U8200

Part	SLG5AP1445V
Type	Load Switch
R(on) @ 4A	7.8 mOhm Typ TBD mOhm Max
Current	4A Max

System Power States

	System State:	Shutdown (G3H)		Standby (G3S)		Standby (S4)		Sleep (S0i/S3)		Run (S0)
	CPU/PCH State:	Off (RTC Only)		Off (RTC Only)		Standby		Sleep		Run
Rails	SoC State:	S2R	Awake	S2R	Awake	S2R	Awake	S2R	Awake	Awake
PP*_S2R (0.8,1.1,1.8V)		On	On	On	On	On	On	On	On	On
PP*_DDR (0.8,0.9,1.1V)		Off	On	Off	On	Off	On	Off	On	On
PP*_AWAKE (CPU,SRAM,1.2,1.8,3.3V)		Off	On	Off	On	Off	On	Off	On	On
PP3V3_G3H (VR1)		On	On	On	On	On	On	On	On	On
PP1S_G3H		On	On	On	On	On	On	On	On	On
PP*_G3S (1.8,3.3,5V)		Off	On	On	On	On	On	On	On	On
PP*_S5 (1.8,3.3V)		Off	Off	Off	Off	On	On	On	On	On
CPU/PCH VRs		Off	Off	Off	Off	Off/On	Off/On	Off/On	Off/On	On

* System: Shutdown Awake is a transition state only.
* SoC: SLP_DDR is a transition state only.
* CPU/PCH: S4 is only used by desktops for USB wakes.
* CPU/PCH: S5 is a transition state. May also be used for RTC wakes.

VINAFIX.COM
苹果最新图纸

BOM_COST_GROUP=PLATFORM POWER

PAGE TITLE
Power FETs

Apple Inc.

DRAWING NUMBER 051-04039 SIZE D
REVISION 2.0.0
BRANCH
PAGE 82 OF 145
SHEET 67 OF 85

NOTICE OF PROPRIETARY PROPERTY:
THE INFORMATION CONTAINED HEREIN IS THE PROPRIETARY PROPERTY OF APPLE INC.
THE POSESSOR AGREES TO THE FOLLOWING:
I TO MAINTAIN THIS DOCUMENT IN CONFIDENCE
II NOT TO REPRODUCE OR COPY IT
III NOT TO REVEAL OR PUBLISH IT IN WHOLE OR PART
IV ALL RIGHTS RESERVED

Page Notes

Power aliases required by this page:
- =PPVIN_S0SW_LCDBKLTFET (9-12.6V LCD BACKLIGHT INPUT)
- =PP5V_S0_BKLT (5V BACKLIGHT DRIVER INPUT)

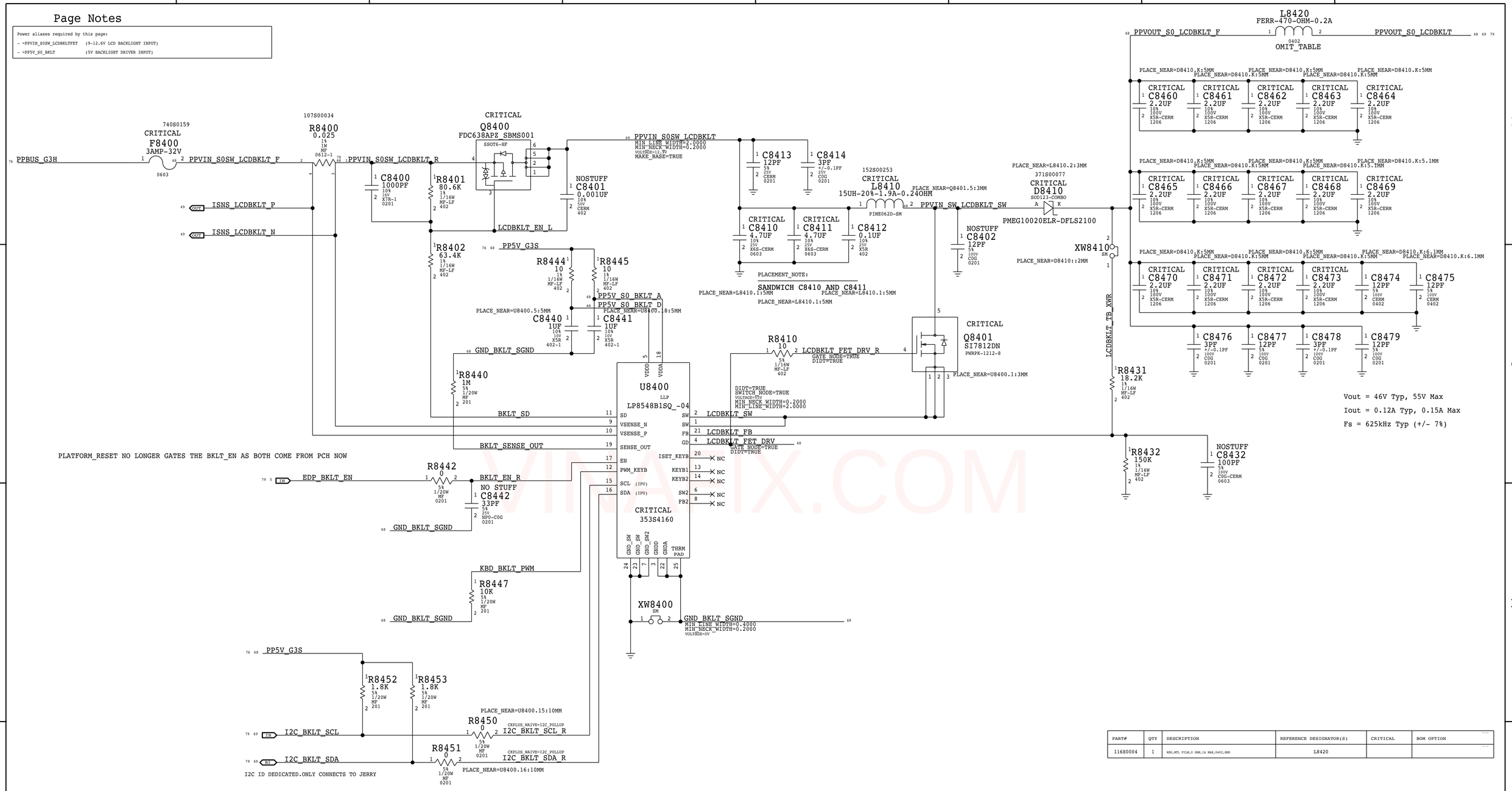

PART#	QTY	DESCRIPTION	REFERENCE DESIGNATOR(S)	CRITICAL	BOM OPTION
116S0004	1	RES,MTL FILM,0 OHM,1A MAX,0402,SMD	L8420		

LINE WIDTHS

PP5V_S0_BKLT_A
MIN_LINE_WIDTH=2.0000
MIN_NECK_WIDTH=0.2000
VOLTAGE=5V

PP5V_S0_BKLT_D
MIN_LINE_WIDTH=2.0000
MIN_NECK_WIDTH=0.2000
VOLTAGE=5V

PBUS LINE WIDTHS

PPVIN_S0SW_LCDBKLT_F
MIN_LINE_WIDTH=2.0000
MIN_NECK_WIDTH=0.2000
VOLTAGE=12.9V

PPVIN_S0SW_LCDBKLT_R
[redacted]
VOLTAGE=12.9V

LCD BKLT LINE WIDTHS

LCDBKLT_FET_DRV
MIN_LINE_WIDTH=0.6000
MIN_NECK_WIDTH=0.2000
VOLTAGE=5V
GATE_NODE=TRUE
DIDT=TRUE

PPVIN_SW_LCDBKLT_SW
MIN_LINE_WIDTH=2.0000
MIN_NECK_WIDTH=0.1200
VOLTAGE=55V
SWITCH_NODE=TRUE
DIDT=TRUE

PPVOUT_S0_LCDBKLT
MIN_LINE_WIDTH=0.5000
MIN_NECK_WIDTH=0.1500
VOLTAGE=55V

(D35) PPVOUT_S0_LCDBKLT_F
MIN_LINE_WIDTH=0.5000
MIN_NECK_WIDTH=0.1500
VOLTAGE=55V

BOM_COST_GROUP=DISPLAY

苹果维修资料

VINAFIX.COM

PAGE TITLE
LCD Backlight Driver

Apple Inc.

DRAWING NUMBER 051-04039
SIZE D
REVISION 2.0.0
BRANCH
PAGE 84 OF 145
SHEET 68 OF 85

NOTICE OF PROPRIETARY PROPERTY:
THE INFORMATION CONTAINED HEREIN IS THE PROPRIETARY PROPERTY OF APPLE INC.
THE POSESSOR AGREES TO THE FOLLOWING:
I TO MAINTAIN THIS DOCUMENT IN CONFIDENCE
II NOT TO REPRODUCE OR COPY IT
III NOT TO REVEAL OR PUBLISH IT IN WHOLE OR PART
IV ALL RIGHTS RESERVED

LCD PANEL INTERFACE (eDP) + Camera (MIPI)

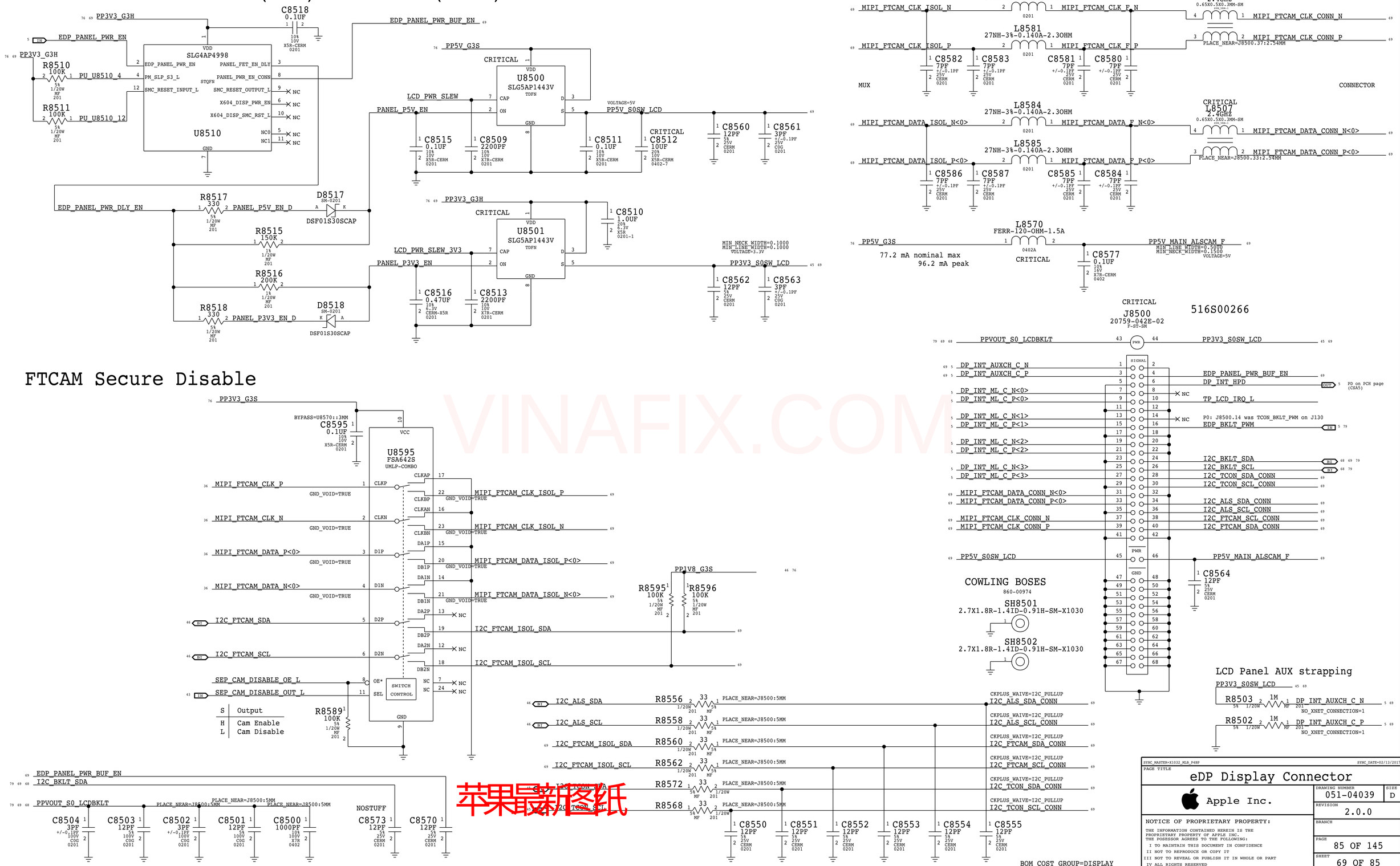

VINAFIX.COM
苹果最新图纸

SYNC_MASTER=X103J_MLB_P48P SYNC_DATE=02/13/2017

PAGE TITLE

eDP Display Connector

Apple Inc.

DRAWING NUMBER	051-04039
SIZE	D
REVISION	2.0.0
BRANCH	
PAGE	85 OF 145
SHEET	69 OF 85

NOTICE OF PROPRIETARY PROPERTY:
THE INFORMATION CONTAINED HEREIN IS THE PROPRIETARY PROPERTY OF APPLE INC.
THE POSESSOR AGREES TO THE FOLLOWING:
I TO MAINTAIN THIS DOCUMENT IN CONFIDENCE
II NOT TO REPRODUCE OR COPY IT
III NOT TO REVEAL OR PUBLISH IT IN WHOLE OR PART
IV ALL RIGHTS RESERVED

S4E0

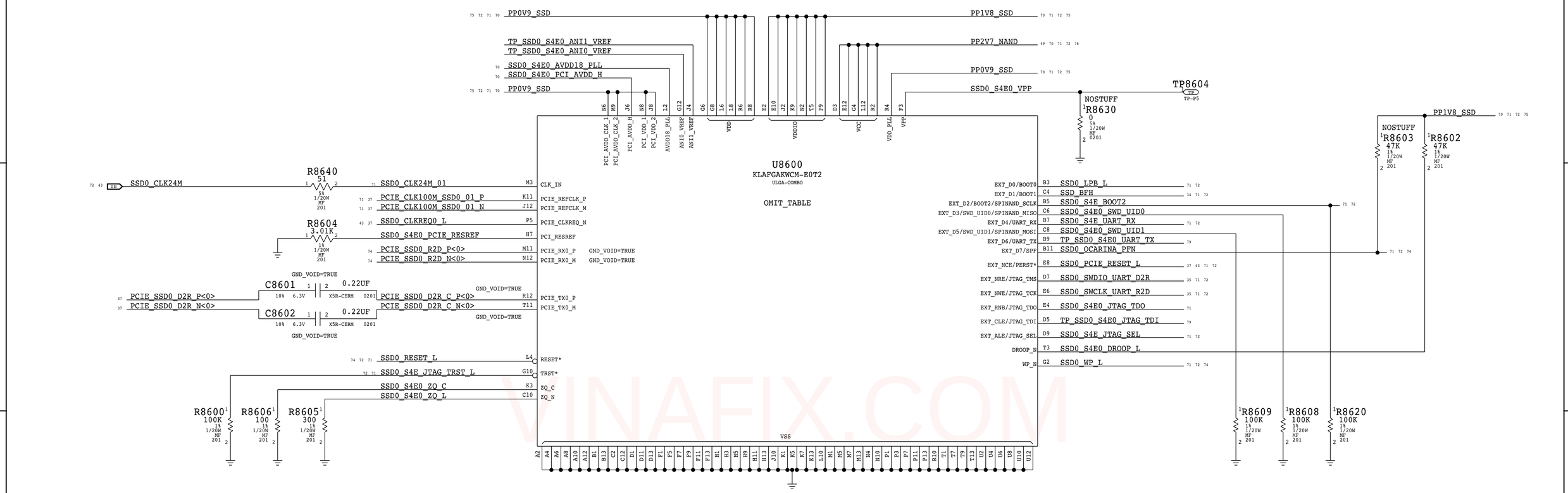

S4E VDD

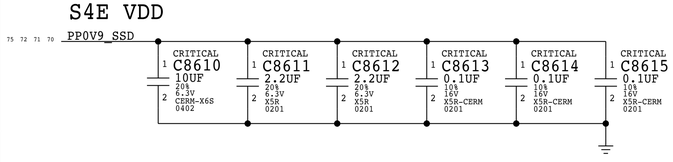

S4E VDDIO

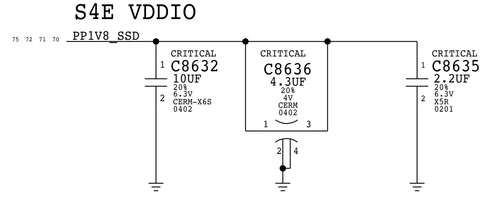

S4E VCC

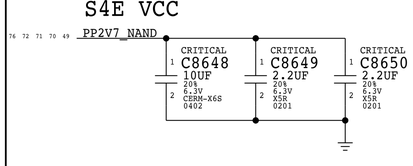

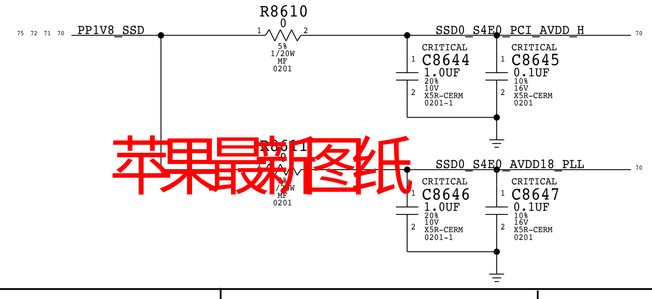

苹果最新图纸

BOM_COST_GROUP=SSD

X1032_MLB_P4BP	SYNC_DATE=02/13/2017
PAGE TITLE	S4E<0>
Apple Inc.	DRAWING NUMBER 051-04039 SIZE D
	REVISION 2.0.0
NOTICE OF PROPRIETARY PROPERTY: THE INFORMATION CONTAINED HEREIN IS THE PROPRIETARY PROPERTY OF APPLE INC. THE POSESSOR AGREES TO THE FOLLOWING: I TO MAINTAIN THIS DOCUMENT IN CONFIDENCE II NOT TO REPRODUCE OR COPY IT III NOT TO REVEAL OR PUBLISH IT IN WHOLE OR PART IV ALL RIGHTS RESERVED	BRANCH
	PAGE 86 OF 145
	SHEET 70 OF 85

VINAFIX.COM

S4E1

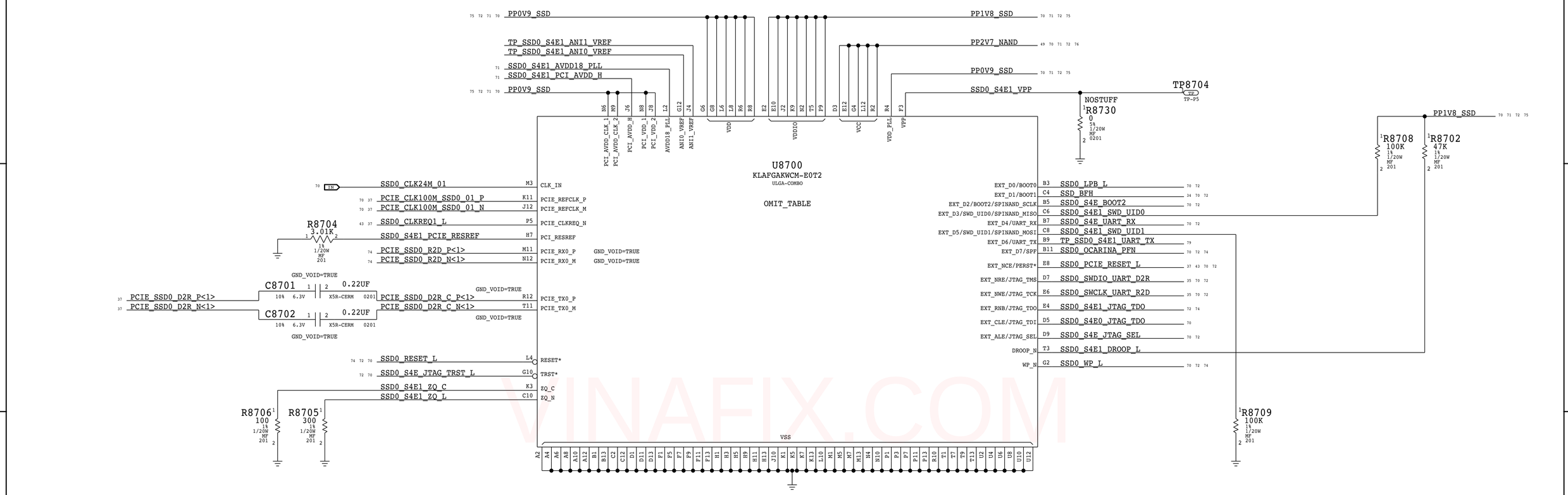

S4E VDD

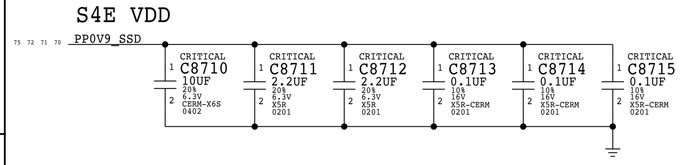

S4E VDDIO

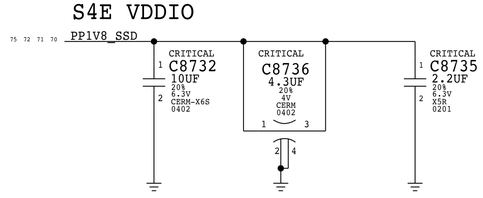

S4E VCC

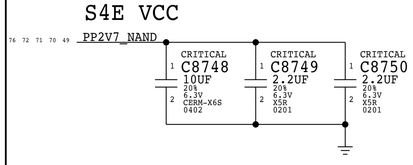

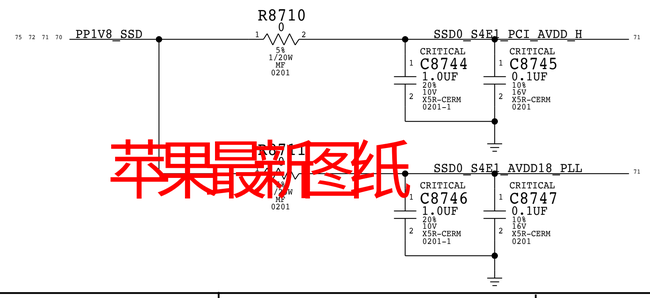

VINAFIX.COM
苹果最新图纸

BOM_COST_GROUP=SSD

X1032_MLB_P4BP	SYNC_DATE=02/13/2017
PAGE TITLE	S4E<1>
Apple Inc.	DRAWING NUMBER 051-04039 SIZE D
	REVISION 2.0.0
	BRANCH
	PAGE 87 OF 145
	SHEET 71 OF 85

NOTICE OF PROPRIETARY PROPERTY:
THE INFORMATION CONTAINED HEREIN IS THE PROPRIETARY PROPERTY OF APPLE INC.
THE POSESSOR AGREES TO THE FOLLOWING:
I TO MAINTAIN THIS DOCUMENT IN CONFIDENCE
II NOT TO REPRODUCE OR COPY IT
III NOT TO REVEAL OR PUBLISH IT IN WHOLE OR PART
IV ALL RIGHTS RESERVED

S4E2

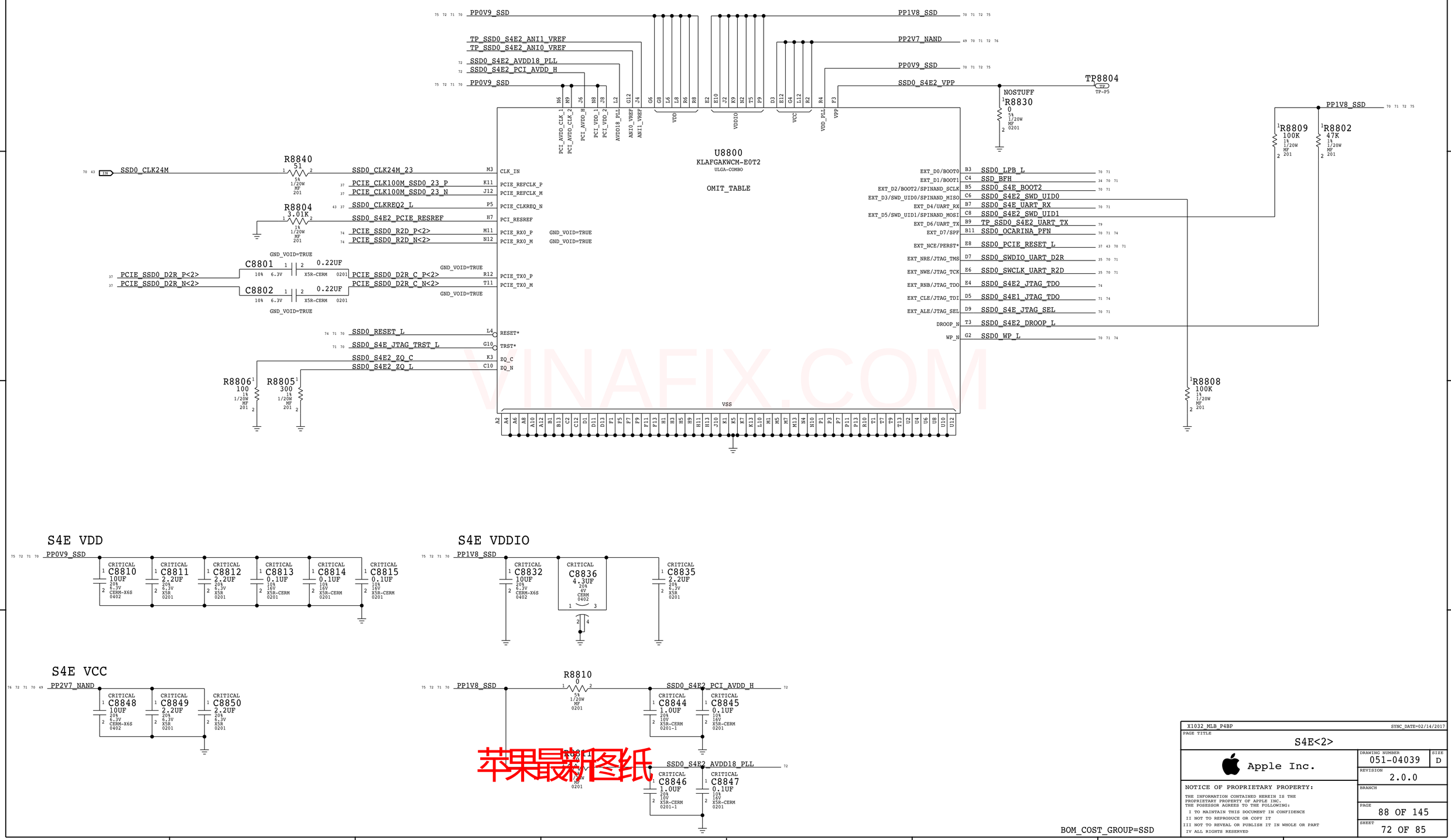

VINAFIX.COM
苹果最新图纸

X1032_MLB_P4BP	SYNC_DATE=02/14/2017
PAGE TITLE	S4E<2>
Apple Inc.	DRAWING NUMBER 051-04039 SIZE D
	REVISION 2.0.0
	BRANCH
	PAGE 88 OF 145
	SHEET 72 OF 85

NOTICE OF PROPRIETARY PROPERTY:
THE INFORMATION CONTAINED HEREIN IS THE PROPRIETARY PROPERTY OF APPLE INC.
THE POSESSOR AGREES TO THE FOLLOWING:
I TO MAINTAIN THIS DOCUMENT IN CONFIDENCE
II NOT TO REPRODUCE OR COPY IT
III NOT TO REVEAL OR PUBLISH IT IN WHOLE OR PART
IV ALL RIGHTS RESERVED

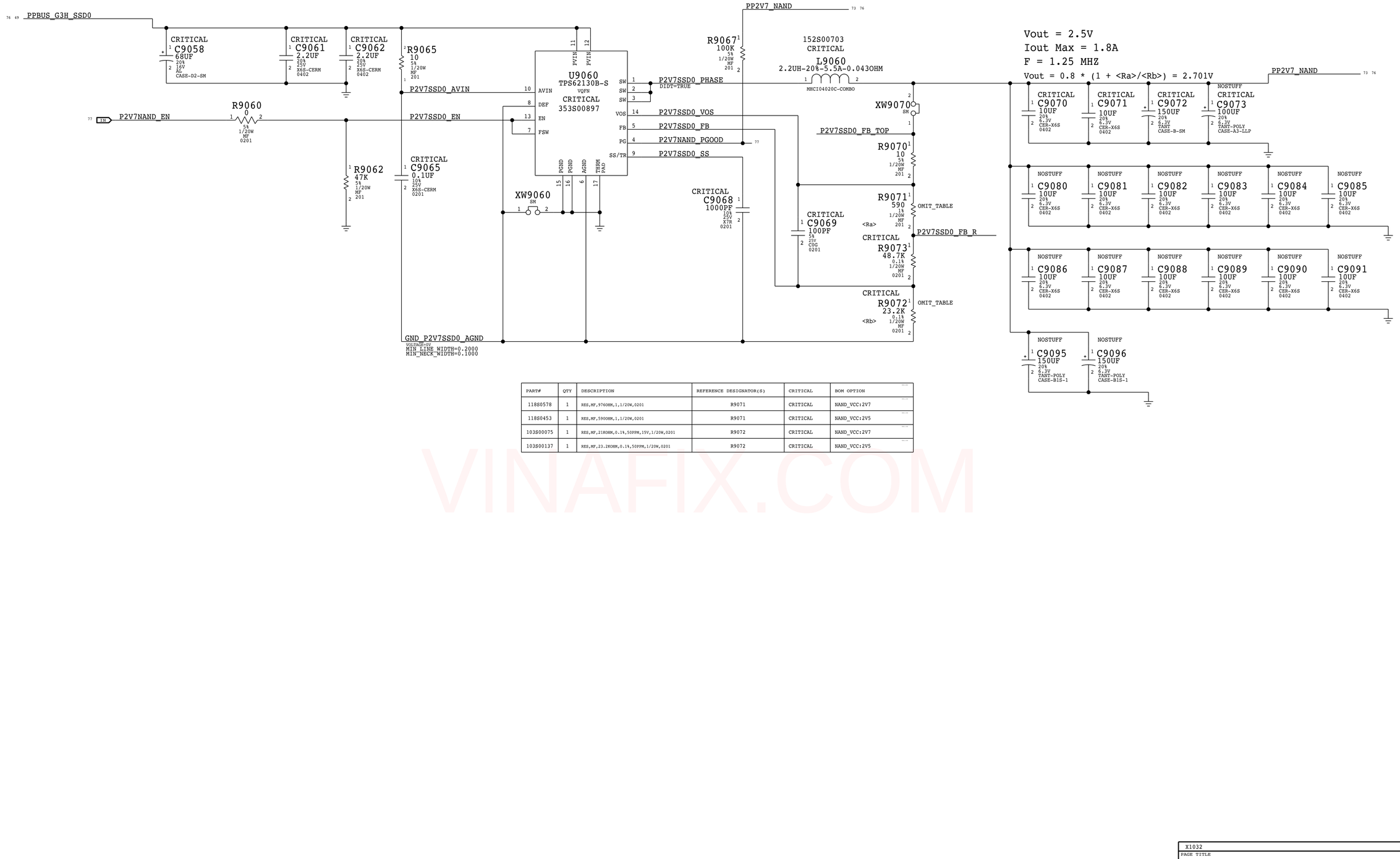

PART#	QTY	DESCRIPTION	REFERENCE DESIGNATOR(S)	CRITICAL	BOM OPTION
118S0578	1	RES,MF,976OHM,1,1/20W,0201	R9071	CRITICAL	NAND_VCC:2V7
118S0453	1	RES,MF,590OHM,1,1/20W,0201	R9071	CRITICAL	NAND_VCC:2V5
103S00075	1	RES,MF,21KOHM,0.1%,50PPM,15V,1/20W,0201	R9072	CRITICAL	NAND_VCC:2V7
103S00137	1	RES,MF,23.2KOHM,0.1%,50PPM,1/20W,0201	R9072	CRITICAL	NAND_VCC:2V5

VINAFIX.COM

苹果最新图纸

BOM_COST_GROUP=SSD

X1032 SYNC_DATE=02/13/2017

PAGE TITLE: NAND VCC VR

Apple Inc.

DRAWING NUMBER: 051-04039 SIZE: D

REVISION: 2.0.0

BRANCH:

PAGE: 90 OF 145

SHEET: 73 OF 85

NOTICE OF PROPRIETARY PROPERTY:
THE INFORMATION CONTAINED HEREIN IS THE PROPRIETARY PROPERTY OF APPLE INC.
THE POSESSOR AGREES TO THE FOLLOWING:
I TO MAINTAIN THIS DOCUMENT IN CONFIDENCE
II NOT TO REPRODUCE OR COPY IT
III NOT TO REVEAL OR PUBLISH IT IN WHOLE OR PART
IV ALL RIGHTS RESERVED

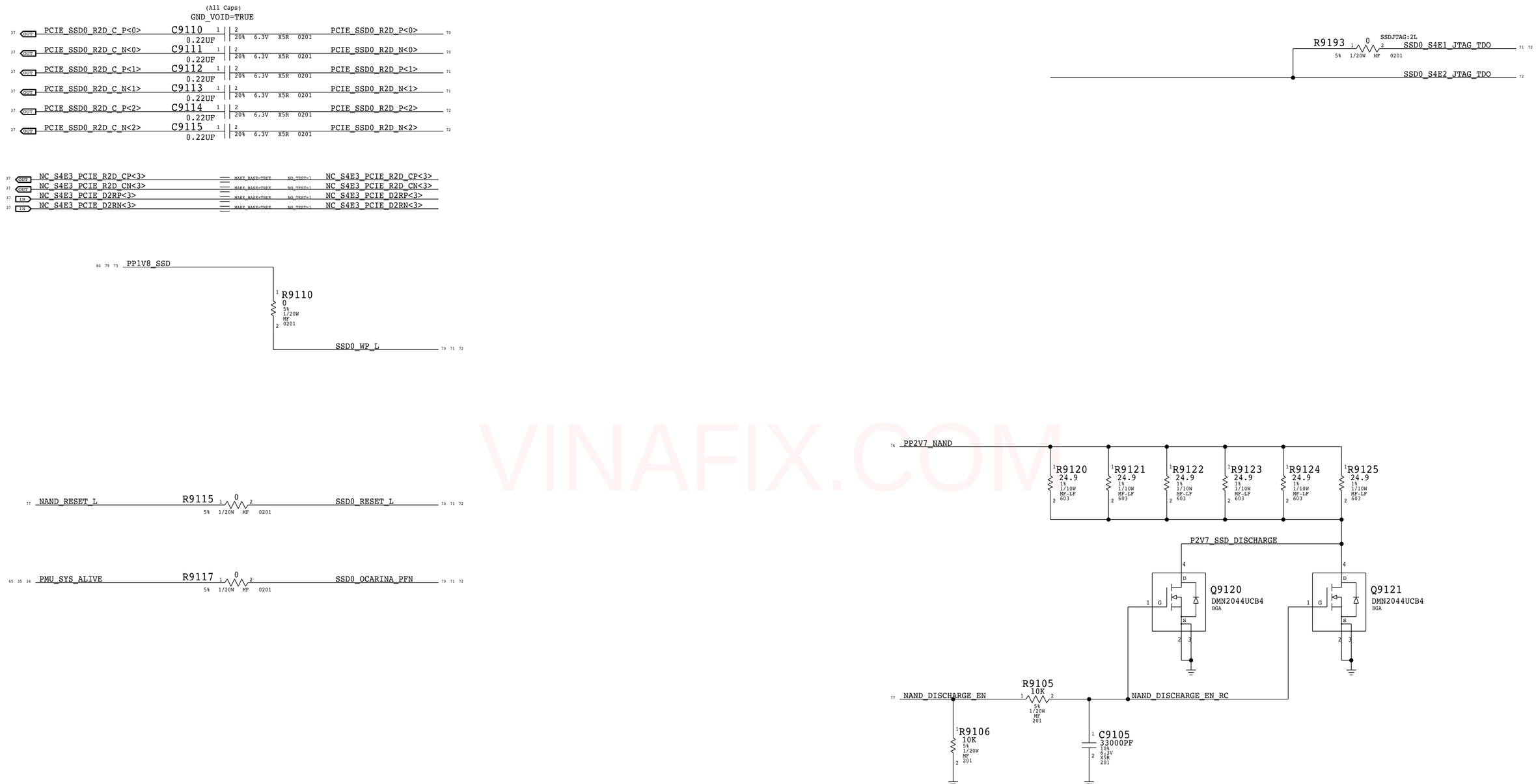

VINAFIX.COM

苹果最新图纸

BOM_COST_GROUP=SSD

PAGE TITLE
SSD Support

Apple Inc.

DRAWING NUMBER 051-04039 SIZE D
REVISION 2.0.0
BRANCH
PAGE 91 OF 145
SHEET 74 OF 85

NOTICE OF PROPRIETARY PROPERTY:
THE INFORMATION CONTAINED HEREIN IS THE PROPRIETARY PROPERTY OF APPLE INC.
THE POSESSOR AGREES TO THE FOLLOWING:
I TO MAINTAIN THIS DOCUMENT IN CONFIDENCE
II NOT TO REPRODUCE OR COPY IT
III NOT TO REVEAL OR PUBLISH IT IN WHOLE OR PART
IV ALL RIGHTS RESERVED

PMIC Buck0 - SoC VDD_CPU

63 PPVDDCPU_AWAKE

Sourced from 3V3 G3H
Enabled by

PPVDDCPU_AWAKE 79
MIN_LINE_WIDTH=0.2000
MIN_NECK_WIDTH=0.0750
VOLTAGE=1.06V
MAKE_BASE=TRUE

PPVDDCPU_AWAKE 38

PMIC Buck1 - SoC VDD_CPU_SRAM

63 PPVDDCPUSRAM_AWAKE

Sourced from 3V3 G3H
Enabled by

PPVDDCPUSRAM_AWAKE
MIN_LINE_WIDTH=0.4000
MIN_NECK_WIDTH=0.0750
VOLTAGE=1.06V
MAKE_BASE=TRUE

PPVDDCPUSRAM_AWAKE 38

PMIC Buck2 - SoC VDD_SOC

63 PP0V82_SLPDDR

Sourced from 3V3 G3H
Enabled by

PP0V82_SLPDDR 79
MIN_LINE_WIDTH=0.7000
MIN_NECK_WIDTH=0.0750
VOLTAGE=0.82V
MAKE_BASE=TRUE

PP0V82_SLPDDR 38
PP0V82_SLPDDR 82

PMIC BUCK3 - SoC AOP/SMC/VDD1

82 63 PP1V8_SLPS2R

Sourced from 3V3 G3H
Enabled by

PP1V8_SLPS2R 79 80
MIN_LINE_WIDTH=0.1000
MIN_NECK_WIDTH=0.0740
VOLTAGE=1.8V
MAKE_BASE=TRUE

PP1V8_SLPS2R 63
PP1V8_SLPS2R 67
PP1V8_SLPS2R 64

PP1V8_SLPS2R 42
PP1V8_SLPS2R 65
PP1V8_SLPS2R 43
PP1V8_SLPS2R 42
PP1V8_SLPS2R 34 43
PP1V8_SLPS2R 40
PP1V8_SLPS2R 40
PP1V8_SLPS2R 40
PP1V8_SLPS2R 40
PP1V8_SLPS2R 27
PP1V8_SLPS2R 58
PP1V8_SLPS2R 45 57

PP1V8_SLPS2R 45
PP1V8_SLPS2R 43 52 55
PP1V8_SLPS2R 28
PP1V8_SLPS2R 29

PMIC BUCK3 SW 1

82 63 PP1V8_AWAKE

Sourced from PP1V8_SLPS2R
Enabled by

PP1V8_AWAKE 79
MIN_LINE_WIDTH=0.0900
MIN_NECK_WIDTH=0.0750
VOLTAGE=1.8V
MAKE_BASE=TRUE

PP1V8_AWAKE 65
PP1V8_AWAKE 42
PP1V8_AWAKE 40
PP1V8_AWAKE 40
PP1V8_AWAKE 40
PP1V8_AWAKE 40
PP1V8_AWAKE 40
PP1V8_AWAKE 37 42 43
PP1V8_AWAKE 42
PP1V8_AWAKE 56

PMIC BUCK3 SW 3 - VCCPRIM_1P8

63 PP1V8_S5

Sourced from PP1V8_SLPS2R
Enabled by

PP1V8_S5 79 80
MIN_LINE_WIDTH=0.1000
MIN_NECK_WIDTH=0.2000
VOLTAGE=1.8V
MAKE_BASE=TRUE

PP1V8_S5 35
PP1V8_S5 13
PP1V8_S5 19
PP1V8_S5 19
PP1V8_S5 59
PP1V8_S5 66
PP1V8_S5 9 13
PP1V8_S5 65
PP1V8_S5 45
PP1V8_S5 9 13
PP1V8_S5 66
PP1V8_S5 16
PP1V8_S5 45
PP1V8_S5 42
PP1V8_S5 42
PP1V8_S5 20
PP1V8_S5 42

PP1V8_S5 9
PP1V8_S5 9 17
PP1V8_S5 9 14 17
PP1V8_S5 9
PP1V8_S5 9 17
PP1V8_S5 20
PP1V8_S5 45

PMIC BUCK3 SW 4 - VDD1

63 PP1V8_S3

Sourced from PP1V8_SLPS2R
Enabled by

PP1V8_S3 79
MIN_LINE_WIDTH=0.1000
MIN_NECK_WIDTH=0.0750
VOLTAGE=1.8V
MAKE_BASE=TRUE

PP1V8_S3 22 23 66

PMIC BUCK3 SW 5 - UNUSED

PMIC Buck4 - SDRAM VDD2

63 PP1V1_SLPS2R

Sourced from 3V3_G3H
Enabled by

PP1V1_SLPS2R 79
MIN_LINE_WIDTH=0.5000
MIN_NECK_WIDTH=0.0750
VOLTAGE=1.1V
MAKE_BASE=TRUE

PP1V1_SLPS2R 64
PP1V1_SLPS2R 64

PP1V1_SLPS2R 39
PP1V1_SLPS2R 40

U7901 - VDDIO_DDR & PLL

64 PP1V1_SLPDDR

Sourced from
Enabled by

PP1V1_SLPDDR 79
MIN_LINE_WIDTH=0.1000
MIN_NECK_WIDTH=0.0750
VOLTAGE=1.1V
MAKE_BASE=TRUE

PP1V1_SLPDDR 34
PP1V1_SLPDDR 39
PP1V1_SLPDDR 39
PP1V1_SLPDDR 40

PMIC Buck5 - VDD_FIXED

63 PP0V9_SLPDDR

Sourced from 3V3_G3H
Enabled by

PP0V9_SLPDDR
MIN_LINE_WIDTH=0.3000
MIN_NECK_WIDTH=0.0750
VOLTAGE=0.9V
MAKE_BASE=TRUE

PP0V9_SLPDDR 39
PP0V9_SLPDDR 39
PP0V9_SLPDDR 39
PP0V9_SLPDDR 39
PP0V9_SLPDDR 39
PP0V9_SLPDDR 82

PMIC Buck7 - VCCPRIM_CORE

63 PPVCC_PRIM_CORE

Sourced from 3V3_G3H
Enabled by

PPVCC_PRIM_CORE 79
MIN_LINE_WIDTH=0.0900
MIN_NECK_WIDTH=0.0750
VOLTAGE=1.0V
MAKE_BASE=TRUE

PPVCC_PRIM_CORE 9
PPVCC_PRIM_CORE 82

PMIC Buck8 - VCCPRIM_1P0

63 PP1V_PRIM

Sourced from 3V3_G3H
Enabled by

PP1V_PRIM 79
MIN_LINE_WIDTH=0.0900
MIN_NECK_WIDTH=0.0750
VOLTAGE=1V
MAKE_BASE=TRUE

PP1V_PRIM 63

PP1V_PRIM 82

PP1V_PRIM 9

PP1V_PRIM 16
PP1V_PRIM 13
PP1V_PRIM 9
PP1V_PRIM 9
PP1V_PRIM 13
PP1V_PRIM 13
PP1V_PRIM 13
PP1V_PRIM 9
PP1V_PRIM 9
PP1V_PRIM 9
PP1V_PRIM 9 13
PP1V_PRIM 9 13
PP1V_PRIM 13
PP1V_PRIM 9 13
PP1V_PRIM 9 13
PP1V_PRIM 9
PP1V_PRIM 66

PMIC Buck8 SW 1 - VCCSTG

63 PP1V_S0SW

Sourced from PP1V05_PRIM
Enabled by

PP1V_S0SW
MIN_LINE_WIDTH=0.1000
MIN_NECK_WIDTH=0.0750
VOLTAGE=1V
MAKE_BASE=TRUE

PP1V_S0SW 6 8 12 18

PMIC Buck8 SW 2 - VCCPLL, VCCST

63 PP1V_S3

Sourced from PP1V05_PRIM
Enabled by

PP1V_S3
MIN_LINE_WIDTH=0.0900
MIN_NECK_WIDTH=0.0740
VOLTAGE=1.05V
MAKE_BASE=TRUE

PP1V_S3 8 12
PP1V_S3 6 8 12 15 59
PP1V_S3 65
PP1V_S3 42
PP1V_S3 42

PMIC Buck9 - 0V9 SSD

63 PP0V9_SSD

Sourced from 3V3 G3H
Enabled by

PP0V9_SSD 79 80
MIN_LINE_WIDTH=0.4000
MIN_NECK_WIDTH=0.0750
VOLTAGE=0.9V
MAKE_BASE=TRUE

PP0V9_SSD 70 71 72

PMIC Buck10 - 1V8 SSD

63 PP1V8_SSD

Sourced from 3V3 G3H
Enabled by

PP1V8_SSD 74 79 80
MIN_LINE_WIDTH=0.4000
MIN_NECK_WIDTH=0.0750
VOLTAGE=1.8V
MAKE_BASE=TRUE

PP1V8_SSD 70 71 72

PMIC LDO0 - VDD_LOW

64 PP0V8_SLPS2R

Sourced from PP1V1_SLP2R
Enabled by

PP0V8_SLPS2R
MIN_LINE_WIDTH=0.1000
MIN_NECK_WIDTH=0.0750
VOLTAGE=0.8V
MAKE_BASE=TRUE

PP0V8_SLPS2R 39

PMIC LDO1 - PCH VCCRTC

64 PP3V_G3H

Sourced from PP3V3_G3H
Enabled by

PP3V_G3H 79
MIN_LINE_WIDTH=0.1000
MIN_NECK_WIDTH=0.0750
VOLTAGE=3V
MAKE_BASE=TRUE

PP3V_G3H 9 15

PMIC LDO2 - PCIE_REFBUF/PLL

64 PP1V2_AWAKE

Sourced from PP1V8_SLPS2R
Enabled by

PP1V2_AWAKE 79
MIN_LINE_WIDTH=0.1000
MIN_NECK_WIDTH=0.0750
VOLTAGE=1.2V
MAKE_BASE=TRUE

PP1V2_AWAKE 40
PP1V2_AWAKE 40
PP1V2_AWAKE 40
PP1V2_AWAKE 40

PMIC V3P3 SW 1 - USB

64 PP3V3_AWAKE

Sourced from 3V3_G3H
Enabled by

PP3V3_AWAKE 79
MIN_LINE_WIDTH=0.1000
MIN_NECK_WIDTH=0.0750
VOLTAGE=3.3V
MAKE_BASE=TRUE

PP3V3_AWAKE 40

PMIC V3P3 SW 2 - VCCDSW_3P3, VCCPRIM_3P3

64 PP3V3_S5

Sourced from 3V3_G3H
Enabled by

PP3V3_S5
MIN_LINE_WIDTH=0.1500
MIN_NECK_WIDTH=0.0800
VOLTAGE=3.3V
MAKE_BASE=TRUE

PP3V3_S5 9
PP3V3_S5 9
PP3V3_S5 16
PP3V3_S5 20
PP3V3_S5 20

PP3V3_S5 9 13
PP3V3_S5 15
PP3V3_S5 67
PP3V3_S5 9 13
PP3V3_S5 42
PP3V3_S5 66
PP3V3_S5 9 13
PP3V3_S5 9 14
PP3V3_S5 20
PP3V3_S5 43
PP3V3_S5 20

VINAFIX.COM
苹果最新资讯

PAGE TITLE
Power Aliases - 1

Apple Inc.

DRAWING NUMBER 051-04039
SIZE D
REVISION 2.0.0
BRANCH
PAGE 120 OF 145
SHEET 75 OF 85

NOTICE OF PROPRIETARY PROPERTY:
THE INFORMATION CONTAINED HEREIN IS THE PROPRIETARY PROPERTY OF APPLE INC.
THE POSESSOR AGREES TO THE FOLLOWING:
I TO MAINTAIN THIS DOCUMENT IN CONFIDENCE
II NOT TO REPRODUCE OR COPY IT
III NOT TO REVEAL OR PUBLISH IT IN WHOLE OR PART
IV ALL RIGHTS RESERVED

PBUS Rails

U7000 - PBUS

50 PPBUS_G3H
- PPBUS_G3H — MIN_LINE_WIDTH=0.1200, MIN_NECK_WIDTH=0.1200, VOLTAGE=13.1V, MAKE_BASE=TRUE — 79 80
- PPBUS_G3H 47
- PPBUS_G3H 47
- PPBUS_G3H 47
- PPBUS_G3H 68
- PPBUS_G3H 47
- PPBUS_G3H 53
- PPBUS_G3H 52
- PPBUS_G3H 49
- PPBUS_G3H 49
- PPBUS_G3H 47
- PPBUS_G3H 65
- PPBUS_G3H 31
- PPBUS_G3H 43

47 PPBUS_HS_CPU
- PPBUS_HS_CPU — MIN_LINE_WIDTH=0.0900, MIN_NECK_WIDTH=0.2500, VOLTAGE=13.1V, MAKE_BASE=TRUE — 80
- PPBUS_HS_CPU 59
- PPBUS_HS_CPU 60
- PPBUS_HS_CPU 60
- PPBUS_HS_CPU 61
- PPBUS_HS_CPU 46
- PPBUS_HS_CPU 46

29 28 PPDCIN_G3H
- PPDCIN_G3H — MIN_LINE_WIDTH=0.0900, MIN_NECK_WIDTH=0.0750, VOLTAGE=20V, MAKE_BASE=TRUE — 58 79 80
- PPDCIN_G3H 58
- PPDCIN_G3H 47

U7550 - 5V G3S

62 PP5V_G3S
Sourced from PBus
Enabled by P5VG3S_EN
- PP5V_G3S — MIN_LINE_WIDTH=0.0900, MIN_NECK_WIDTH=0.0750, VOLTAGE=5V, MAKE_BASE=TRUE — 62 79 80
- PP5V_G3S 55
- PP5V_G3S 66
- PP5V_G3S 49
- PP5V_G3S 68
- PP5V_G3S 51
- PP5V_G3S 69
- PP5V_G3S 59
- PP5V_G3S 60
- PP5V_G3S 60
- PP5V_G3S 61
- PP5V_G3S 28
- PP5V_G3S 29
- PP5V_G3S 46

U7550 - 5V LDO - UNUSED

62 PP5V_S5_LDO
- PP5V_S5_LDO — MIN_LINE_WIDTH=0.0900, MIN_NECK_WIDTH=0.0750, VOLTAGE=5V, MAKE_BASE=TRUE

Sensed Rails

62 47 PPVIN_G3H_P5VG3S
- PPVIN_G3H_P5VG3S — MIN_LINE_WIDTH=0.1000, MIN_NECK_WIDTH=0.2000, VOLTAGE=13.1V, MAKE_BASE=TRUE — 80

62 47 PPVIN_G3H_P3V3G3H
- PPVIN_G3H_P3V3G3H — MIN_LINE_WIDTH=0.1000, MIN_NECK_WIDTH=0.2000, VOLTAGE=13.1V, MAKE_BASE=TRUE — 80

57 47 PPVIN_G3H_P3V3G3HRTC
- PPVIN_G3H_P3V3G3HRTC — MIN_LINE_WIDTH=0.1000, MIN_NECK_WIDTH=0.2000, VOLTAGE=13.1V, MAKE_BASE=TRUE

63 48 PP3V3_G3H_PMU_VDDMAIN
- PP3V3_G3H_PMU_VDDMAIN — MIN_LINE_WIDTH=0.1000, MIN_NECK_WIDTH=0.2000, VOLTAGE=3.3V, MAKE_BASE=TRUE — 80

48 32 PP3V3_G3S_WLANBT
- PP3V3_G3S_WLANBT — MIN_LINE_WIDTH=0.1000, MIN_NECK_WIDTH=0.2000, VOLTAGE=3.3V, MAKE_BASE=TRUE — 79
- PP3V3_G3S_WLANBT 33

73 49 PPBUS_G3H_SSD0
- PPBUS_G3H_SSD0 — MIN_LINE_WIDTH=0.1000, MIN_NECK_WIDTH=0.2000, VOLTAGE=13.1V, MAKE_BASE=TRUE

55 49 PPBUS_G3H_TPAD
- PPBUS_G3H_TPAD — MIN_LINE_WIDTH=0.1000, MIN_NECK_WIDTH=0.2000, VOLTAGE=13.1V, MAKE_BASE=TRUE — 80

Digital Ground

GND — VOLTAGE=0V, MIN_LINE_WIDTH=0.0900, MIN_NECK_WIDTH=0.0700

3V3 Rails

U6960 - 3V3_G3H_RTC

57 PP3V3_G3H_RTC
Sourced from PBus
Enabled by CHGR_EN_MVR
- PP3V3_G3H_RTC — MIN_LINE_WIDTH=0.2000, MIN_NECK_WIDTH=0.0740, VOLTAGE=3.3V, MAKE_BASE=TRUE — 79
- PP3V3_G3H_RTC 67
- PP3V3_G3H_RTC 44
- PP3V3_G3H_RTC 57
- PP3V3_G3H_RTC 65
- PP3V3_G3H_RTC 57
- PP3V3_G3H_RTC 28
- PP3V3_G3H_RTC 29

U7550 - 3V3_G3H VDD_MAIN

62 PP3V3_G3H
64 PP3V3_G3H
Sourced from PBus
Enabled by PMU_VDDMAIN_EN
VOUT_RTC sourced from PP3V3_G3H_RTC input to PMIC
- PP3V3_G3H — MIN_LINE_WIDTH=0.0900, MIN_NECK_WIDTH=0.0750, VOLTAGE=3.3V, MAKE_BASE=TRUE — 79 80
- PP3V3_G3H 48
- PP3V3_G3H 67
- PP3V3_G3H 64
- PP3V3_G3H 64
- PP3V3_G3H 67
- PP3V3_G3H 64
- PP3V3_G3H 67
- PP3V3_G3H 67
- PP3V3_G3H 67
- PP3V3_G3H 62
- PP3V3_G3H 27
- PP3V3_G3H 82
- PP3V3_G3H 57
- PP3V3_G3H 55
- PP3V3_G3H 52
- PP3V3_G3H 27
- PP3V3_G3H 69

U8225 - 3V3 Sensors

67 PP3V3_G3SSW_SNS
Sourced from 3V3_G3H_RTC
Enabled by SENSOR_PWR_EN
- PP3V3_G3SSW_SNS — MIN_LINE_WIDTH=0.0900, MIN_NECK_WIDTH=0.0750, VOLTAGE=3.3V, MAKE_BASE=TRUE
- PP3V3_G3SSW_SNS 47
- PP3V3_G3SSW_SNS 47 48 49

U8210 - 3V3_G3S

67 PP3V3_G3S
Sourced from 3V3_G3H_RTC
Enabled by P3V3G3S_EN
- PP3V3_G3S — MIN_LINE_WIDTH=0.3000, MIN_NECK_WIDTH=0.0740, VOLTAGE=3.3V, MAKE_BASE=TRUE — 79 80
- PP3V3_G3S 52
- PP3V3_G3S 55
- PP3V3_G3S 44
- PP3V3_G3S 69
- PP3V3_G3S 56
- PP3V3_G3S 48

U8200 - 3V3_TBT_X_S0

67 PP3V3_TBT_X_S0
Sourced from 3V3_G3H
Enabled by TBT_PWR_EN
- PP3V3_TBT_X_S0 — 26 27

U9080 - NAND 2V7

73 PP2V7_NAND
Sourced from PBUS
Enabled by VR_P2V7_EN
- PP2V7_NAND — MIN_LINE_WIDTH=0.0900, MIN_NECK_WIDTH=0.0750, VOLTAGE=2.7V, MAKE_BASE=TRUE — 79 80
- PP2V7_NAND 49 70 71 72
- PP2V7_NAND 74

65 GND

1V8 Rails

U8220 - 1V8_G3S

67 PP1V8_G3S
Sourced from 1V8 SLEEPS2R
Enabled by P1V8G3S_EN
- PP1V8_G3S — MIN_LINE_WIDTH=0.0800, MIN_NECK_WIDTH=0.2000, VOLTAGE=1.8V, MAKE_BASE=TRUE — 79 80
- PP1V8_G3S 33
- PP1V8_G3S 51
- PP1V8_G3S 46
- PP1V8_G3S 46 69
- PP1V8_G3S 46
- PP1V8_G3S 45
- PP1V8_G3S 46
- PP1V8_G3S 43
- PP1V8_G3S 62
- PP1V8_G3S 44
- PP1V8_G3S 54 55
- PP1V8_G3S 50
- PP1V8_G3S 56
- PP1V8_G3S 33
- PP1V8_G3S 32
- PP1V8_G3S 44
- PP1V8_G3S 52 53 54

CPU/PCH Rails

U7210, U7230 - VCCCORE

60 PPVCC_S0_CPU
Sourced from PBus
Enabled by CPU_VR_EN
- PPVCC_S0_CPU — MIN_LINE_WIDTH=0.0900, MIN_NECK_WIDTH=0.0750, VOLTAGE=1.5V, MAKE_BASE=TRUE — 79 80
- PPVCC_S0_CPU 8 11 49

U7290 - VCCSA

60 PPVCCSA_S0_CPU
Sourced from PBus
Enabled by CPU_VR_EN
- PPVCCSA_S0_CPU — MIN_LINE_WIDTH=0.1000, MIN_NECK_WIDTH=0.1000, VOLTAGE=1.5V, MAKE_BASE=TRUE — 81
- PPVCCSA_S0_CPU 8 11

U7290 - VCCSA_DDR

60 PPVCCSA_S0_CPUDDR
Sourced from PBus
Enabled by CPU_VR_EN
- PPVCCSA_S0_CPUDDR — MIN_LINE_WIDTH=0.0900, MIN_NECK_WIDTH=0.0750, VOLTAGE=1.5V, MAKE_BASE=TRUE
- PPVCCSA_S0_CPUDDR 8 11

U7410, U7430 - VCCGT

61 PPVCCGT_S0_CPU
Sourced from PBus
Enabled by CPU_VR_EN
- PPVCCGT_S0_CPU — MIN_LINE_WIDTH=0.0900, MIN_NECK_WIDTH=0.0750, VOLTAGE=1.5V, MAKE_BASE=TRUE — 81
- PPVCCGT_S0_CPU 8 12

U8110 - VCCIO

66 PPVCCIO_S0_CPU
Sourced from PBus
Enabled by CPU_VR_EN
- PPVCCIO_S0_CPU — MIN_LINE_WIDTH=0.0900, MIN_NECK_WIDTH=0.0750, VOLTAGE=0.95V, MAKE_BASE=TRUE — 49
- PPVCCIO_S0_CPU 5 8 11
- PPVCCIO_S0_CPU 8

U8240 - VCCPLL OC SW

67 PP1V2_S0SW
Sourced from PP1V1_S3
Enabled by CPU_C10_GATE_L && PVCCPLLOC_EN
- PP1V2_S0SW — MIN_LINE_WIDTH=0.0900, MIN_NECK_WIDTH=0.0750, VOLTAGE=1.2V, MAKE_BASE=TRUE — 79
- PP1V2_S0SW 8 12

Memory Rails

U8100 - Memory VDD2, VDDCA, VDDQ; CPU VDDQ

66 PP1V2_S3
Sourced from PBUS
Enabled by PVDDQ_EN
- PP1V2_S3 — MIN_LINE_WIDTH=0.1000, MIN_NECK_WIDTH=0.0750, VOLTAGE=0.95V, MAKE_BASE=TRUE — 79 80
- PP1V2_S3 67
- PP1V2_S3 8 12
- PP1V2_S3 66
- PP1V2_S3 21
- PP1V2_S3 22 23
- PP1V2_S3 22 23
- PP1V2_S3 22 23

U8100 - Memory VTT

66 PP0V6_S0_DDRVTT
Sourced from PBUS
Enabled by PVDDQ_EN
- PP0V6_S0_DDRVTT — MIN_LINE_WIDTH=0.1000, MIN_NECK_WIDTH=0.0750, VOLTAGE=0.6V, MAKE_BASE=TRUE — 81
- PP0V6_S0_DDRVTT 24
- PP0V6_S0_DDRVTT 24

Memory VRef

22 PPVREF_S3_MEM_VREFDQ_A
- PPVREF_S3_MEM_VREFDQ_A — MIN_LINE_WIDTH=0.3000, MIN_NECK_WIDTH=0.2000, VOLTAGE=0.6V, MAKE_BASE=TRUE — 21

23 PPVREF_S3_MEM_VREFDQ_B
- PPVREF_S3_MEM_VREFDQ_B — MIN_LINE_WIDTH=0.3000, MIN_NECK_WIDTH=0.2000, VOLTAGE=0.6V, MAKE_BASE=TRUE — 21

22 PPVREF_S3_MEM_VREFCA
23 PPVREF_S3_MEM_VREFCA
- PPVREF_S3_MEM_VREFCA — MIN_LINE_WIDTH=0.3000, MIN_NECK_WIDTH=0.2000, VOLTAGE=0.6V, MAKE_BASE=TRUE — 21

苹果最新图纸

VINAFIX.COM

PAGE TITLE: Power Aliases - 2

Apple Inc.

DRAWING NUMBER: 051-04039 | SIZE: D
REVISION: 2.0.0
BRANCH:
PAGE: 121 OF 145
SHEET: 76 OF 85

NOTICE OF PROPRIETARY PROPERTY:
THE INFORMATION CONTAINED HEREIN IS THE PROPRIETARY PROPERTY OF APPLE INC.
THE POSESSOR AGREES TO THE FOLLOWING:
I TO MAINTAIN THIS DOCUMENT IN CONFIDENCE
II NOT TO REPRODUCE OR COPY IT
III NOT TO REVEAL OR PUBLISH IT IN WHOLE OR PART
IV ALL RIGHTS RESERVED

Unused CPU/PCH Signals

16	NC_USB3_EXTC_D2RP	MAKE_BASE=TRUE	NO_TEST=1	NC_USB3_EXTC_D2RP
16	NC_USB3_EXTC_D2RN	MAKE_BASE=TRUE	NO_TEST=1	NC_USB3_EXTC_D2RN
16	NC_USB3_EXTC_R2D_CN	MAKE_BASE=TRUE	NO_TEST=1	NC_USB3_EXTC_R2D_CN
16	NC_USB3_EXTC_R2D_CP	MAKE_BASE=TRUE	NO_TEST=1	NC_USB3_EXTC_R2D_CP
16	NC_USB3_EXTD_D2RP	MAKE_BASE=TRUE	NO_TEST=1	NC_USB3_EXTD_D2RP
16	NC_USB3_EXTD_D2RN	MAKE_BASE=TRUE	NO_TEST=1	NC_USB3_EXTD_D2RN
16	NC_USB3_EXTD_R2D_CN	MAKE_BASE=TRUE	NO_TEST=1	NC_USB3_EXTD_R2D_CN
16	NC_USB3_EXTD_R2D_CP	MAKE_BASE=TRUE	NO_TEST=1	NC_USB3_EXTD_R2D_CP
16	NC_PCIE_CLK100M_DEBUGP	MAKE_BASE=TRUE	NO_TEST=1	NC_PCIE_CLK100M_DEBUGP
16	NC_PCIE_CLK100M_DEBUGN	MAKE_BASE=TRUE	NO_TEST=1	NC_PCIE_CLK100M_DEBUGN

Unused Misc Signals

65	NC_PMU_CLK32K_GNSS_R	MAKE_BASE=TRUE	NO_TEST=1	NC_PMU_CLK32K_GNSS_R
65	NC_GPU_THRMTRIP	MAKE_BASE=TRUE	NO_TEST=1	NC_GPU_THRMTRIP
65	NC_P3V3G3W_EN	MAKE_BASE=TRUE	NO_TEST=1	NC_P3V3G3W_EN
65	NC_P3V3G3W_PGOOD	MAKE_BASE=TRUE	NO_TEST=1	NC_P3V3G3W_PGOOD
58	NC_CHGR_EN_VR1	MAKE_BASE=TRUE	NO_TEST=1	NC_CHGR_EN_VR1
58	NC_CHGR_AUX_OK	MAKE_BASE=TRUE	NO_TEST=1	NC_CHGR_AUX_OK
28	NC_USBC_XA_USB_BOTP	MAKE_BASE=TRUE	NO_TEST=1	NC_USBC_XA_USB_BOTP
28	NC_USBC_XA_USB_BOTN	MAKE_BASE=TRUE	NO_TEST=1	NC_USBC_XA_USB_BOTN

Unused SoC Signals

35	NC_ALTIMETER_INT	MAKE_BASE=TRUE	NO_TEST=1	NC_ALTIMETER_INT
34	NC_DFR_DISP_INT	MAKE_BASE=TRUE	NO_TEST=1	NC_DFR_DISP_INT
34	NC_DFR_DISP_RESET_L	MAKE_BASE=TRUE	NO_TEST=1	NC_DFR_DISP_RESET_L
34	NC_DFR_DISP_TE	MAKE_BASE=TRUE	NO_TEST=1	NC_DFR_DISP_TE
34	NC_DFR_PWR_EN	MAKE_BASE=TRUE	NO_TEST=1	NC_DFR_PWR_EN
34	NC_DFR_TOUCH_CLK32K_RESET_L	MAKE_BASE=TRUE	NO_TEST=1	NC_DFR_TOUCH_CLK32K_RESET_L
35	NC_DFR_TOUCH_INT_L	MAKE_BASE=TRUE	NO_TEST=1	NC_DFR_TOUCH_INT_L
34	NC_DFR_TOUCH_RESET_L	MAKE_BASE=TRUE	NO_TEST=1	NC_DFR_TOUCH_RESET_L
34	NC_DFR_TOUCH_RSVD	MAKE_BASE=TRUE	NO_TEST=1	NC_DFR_TOUCH_RSVD
35	NC_DISP_GCON_INT_L	MAKE_BASE=TRUE	NO_TEST=1	NC_DISP_GCON_INT_L
35	NC_ENET_LOW_PWR	MAKE_BASE=TRUE	NO_TEST=1	NC_ENET_LOW_PWR
35	NC_ENET_MEDIA_SENSE	MAKE_BASE=TRUE	NO_TEST=1	NC_ENET_MEDIA_SENSE
37	NC_ENET_RESET_L	MAKE_BASE=TRUE	NO_TEST=1	NC_ENET_RESET_L
34	NC_FTCAM_CLK12M_R	MAKE_BASE=TRUE	NO_TEST=1	NC_FTCAM_CLK12M_R
34	NC_FTCAM_RESET_L	MAKE_BASE=TRUE	NO_TEST=1	NC_FTCAM_RESET_L
34	NC_GNSS_DEV_WAKE	MAKE_BASE=TRUE	NO_TEST=1	NC_GNSS_DEV_WAKE
34	NC_GNSS_HOST_TIME	MAKE_BASE=TRUE	NO_TEST=1	NC_GNSS_HOST_TIME
35	NC_GNSS_HOST_WAKE	MAKE_BASE=TRUE	NO_TEST=1	NC_GNSS_HOST_WAKE
36	NC_I2S_CODEC_MCLK	MAKE_BASE=TRUE	NO_TEST=1	NC_I2S_CODEC_MCLK
36	NC_I2S_CODEC1_MCLK	MAKE_BASE=TRUE	NO_TEST=1	NC_I2S_CODEC1_MCLK
36	NC_I2S_CODEC1_R2D_R	MAKE_BASE=TRUE	NO_TEST=1	NC_I2S_CODEC1_R2D_R
36	NC_I2S_HAWKING_BCLK_R	MAKE_BASE=TRUE	NO_TEST=1	NC_I2S_HAWKING_BCLK_R
36	NC_I2S_HAWKING_D2R	MAKE_BASE=TRUE	NO_TEST=1	NC_I2S_HAWKING_D2R
36	NC_I2S_HAWKING_LRCLK	MAKE_BASE=TRUE	NO_TEST=1	NC_I2S_HAWKING_LRCLK
35	NC_MESA_MENUKEY_L	MAKE_BASE=TRUE	NO_TEST=1	NC_MESA_MENUKEY_L
36	NC_MIPI_DFR_CLKN	MAKE_BASE=TRUE	NO_TEST=1	NC_MIPI_DFR_CLKN
36	NC_MIPI_DFR_CLKP	MAKE_BASE=TRUE	NO_TEST=1	NC_MIPI_DFR_CLKP
36	NC_MIPI_DFR_DATAN	MAKE_BASE=TRUE	NO_TEST=1	NC_MIPI_DFR_DATAN
36	NC_MIPI_DFR_DATAP	MAKE_BASE=TRUE	NO_TEST=1	NC_MIPI_DFR_DATAP
35	NC_PCC_EVENT	MAKE_BASE=TRUE	NO_TEST=1	NC_PCC_EVENT
35	NC_PCH_GCON_INT_L	MAKE_BASE=TRUE	NO_TEST=1	NC_PCH_GCON_INT_L
37	NC_PCIE_CLK100M_ENETN	MAKE_BASE=TRUE	NO_TEST=1	NC_PCIE_CLK100M_ENETN
37	NC_PCIE_CLK100M_ENETP	MAKE_BASE=TRUE	NO_TEST=1	NC_PCIE_CLK100M_ENETP
37	NC_PCIE_CLK100M_SSD1_01N	MAKE_BASE=TRUE	NO_TEST=1	NC_PCIE_CLK100M_SSD1_01N
37	NC_PCIE_CLK100M_SSD1_01P	MAKE_BASE=TRUE	NO_TEST=1	NC_PCIE_CLK100M_SSD1_01P
37	NC_PCIE_CLK100M_SSD1_23N	MAKE_BASE=TRUE	NO_TEST=1	NC_PCIE_CLK100M_SSD1_23N
37	NC_PCIE_CLK100M_SSD1_23P	MAKE_BASE=TRUE	NO_TEST=1	NC_PCIE_CLK100M_SSD1_23P
37	NC_PCIE_CLK100M_WLANN	MAKE_BASE=TRUE	NO_TEST=1	NC_PCIE_CLK100M_WLANN
37	NC_PCIE_CLK100M_WLANP	MAKE_BASE=TRUE	NO_TEST=1	NC_PCIE_CLK100M_WLANP
37	NC_PCIE_ENET_D2RN	MAKE_BASE=TRUE	NO_TEST=1	NC_PCIE_ENET_D2RN
37	NC_PCIE_ENET_D2RP	MAKE_BASE=TRUE	NO_TEST=1	NC_PCIE_ENET_D2RP
37	NC_PCIE_ENET_R2D_CN	MAKE_BASE=TRUE	NO_TEST=1	NC_PCIE_ENET_R2D_CN
37	NC_PCIE_ENET_R2D_CP	MAKE_BASE=TRUE	NO_TEST=1	NC_PCIE_ENET_R2D_CP
37	NC_PCIE_SSD1_D2RN<3..0>	MAKE_BASE=TRUE	NO_TEST=1	NC_PCIE_SSD1_D2RN<3..0>
37	NC_PCIE_SSD1_D2RP<3..0>	MAKE_BASE=TRUE	NO_TEST=1	NC_PCIE_SSD1_D2RP<3..0>
37	NC_PCIE_SSD1_R2D_CN<3..0>	MAKE_BASE=TRUE	NO_TEST=1	NC_PCIE_SSD1_R2D_CN<3..0>
37	NC_PCIE_SSD1_R2D_CP<3..0>	MAKE_BASE=TRUE	NO_TEST=1	NC_PCIE_SSD1_R2D_CP<3..0>
37	NC_PCIE_WLAN_D2RN	MAKE_BASE=TRUE	NO_TEST=1	NC_PCIE_WLAN_D2RN
37	NC_PCIE_WLAN_D2RP	MAKE_BASE=TRUE	NO_TEST=1	NC_PCIE_WLAN_D2RP
37	NC_PCIE_WLAN_R2D_CN	MAKE_BASE=TRUE	NO_TEST=1	NC_PCIE_WLAN_R2D_CN
37	NC_PCIE_WLAN_R2D_CP	MAKE_BASE=TRUE	NO_TEST=1	NC_PCIE_WLAN_R2D_CP
35	NC_PCIEDN_WAKE_L	MAKE_BASE=TRUE	NO_TEST=1	NC_PCIEDN_WAKE_L
35	NC_PLCAM_PROX_INT_L	MAKE_BASE=TRUE	NO_TEST=1	NC_PLCAM_PROX_INT_L
35	NC_PLCAM_ROMEO_B2B_DETECT	MAKE_BASE=TRUE	NO_TEST=1	NC_PLCAM_ROMEO_B2B_DETECT
36	NC_PLCAM_RX_CLK12M_R	MAKE_BASE=TRUE	NO_TEST=1	NC_PLCAM_RX_CLK12M_R
36	NC_PLCAM_RX_RESET_L	MAKE_BASE=TRUE	NO_TEST=1	NC_PLCAM_RX_RESET_L
36	NC_PLCAM_TX_CLK12M_R	MAKE_BASE=TRUE	NO_TEST=1	NC_PLCAM_TX_CLK12M_R
36	NC_PLCAM_TX_INT	MAKE_BASE=TRUE	NO_TEST=1	NC_PLCAM_TX_INT
34	NC_PLCAM_TX_RESET_L	MAKE_BASE=TRUE	NO_TEST=1	NC_PLCAM_TX_RESET_L
34	NC_PLCAM_TX_THROTTLE	MAKE_BASE=TRUE	NO_TEST=1	NC_PLCAM_TX_THROTTLE
35	NC_SDCONN_STATE_CHANGE_L	MAKE_BASE=TRUE	NO_TEST=1	NC_SDCONN_STATE_CHANGE_L
35	NC_SMC_FAN_1_PWM	MAKE_BASE=TRUE	NO_TEST=1	NC_SMC_FAN_1_PWM
35	NC_SMC_FAN_1_TACH	MAKE_BASE=TRUE	NO_TEST=1	NC_SMC_FAN_1_TACH
35	NC_SMC_GFX_SELF_THROTTLE	MAKE_BASE=TRUE	NO_TEST=1	NC_SMC_GFX_SELF_THROTTLE
35	NC_SMC_GFX_THROTTLE_L	MAKE_BASE=TRUE	NO_TEST=1	NC_SMC_GFX_THROTTLE_L
35	NC_SMC_LED_ONEWIRE	MAKE_BASE=TRUE	NO_TEST=1	NC_SMC_LED_ONEWIRE
35	NC_SPI_ALTIMETER_CS_L	MAKE_BASE=TRUE	NO_TEST=1	NC_SPI_ALTIMETER_CS_L
37	NC_SSD1_CLK24M_R	MAKE_BASE=TRUE	NO_TEST=1	NC_SSD1_CLK24M_R
37	NC_SSD1_CLKREQ0_L	MAKE_BASE=TRUE	NO_TEST=1	NC_SSD1_CLKREQ0_L
37	NC_SSD1_CLKREQ1_L	MAKE_BASE=TRUE	NO_TEST=1	NC_SSD1_CLKREQ1_L
37	NC_SSD1_CLKREQ2_L	MAKE_BASE=TRUE	NO_TEST=1	NC_SSD1_CLKREQ2_L
37	NC_SSD1_CLKREQ3_L	MAKE_BASE=TRUE	NO_TEST=1	NC_SSD1_CLKREQ3_L
37	NC_SSD1_PCIE_RESET_L	MAKE_BASE=TRUE	NO_TEST=1	NC_SSD1_PCIE_RESET_L
35	NC_SSD1_SWCLK_UART_R2D	MAKE_BASE=TRUE	NO_TEST=1	NC_SSD1_SWCLK_UART_R2D
35	NC_SSD1_SWDIO_UART_D2R	MAKE_BASE=TRUE	NO_TEST=1	NC_SSD1_SWDIO_UART_D2R
35	NC_TPAD_VIBE_L	MAKE_BASE=TRUE	NO_TEST=1	NC_TPAD_VIBE_L
34	NC_UART_GNSS_D2R_CTS_L	MAKE_BASE=TRUE	NO_TEST=1	NC_UART_GNSS_D2R_CTS_L
34	NC_UART_GNSS_R2D_RTS_L	MAKE_BASE=TRUE	NO_TEST=1	NC_UART_GNSS_R2D_RTS_L
37	NC_WLAN_CLKREQ_L	MAKE_BASE=TRUE	NO_TEST=1	NC_WLAN_CLKREQ_L
34	NC_WLAN_DEV_WAKE	MAKE_BASE=TRUE	NO_TEST=1	NC_WLAN_DEV_WAKE
37	NC_WLAN_PERST_L	MAKE_BASE=TRUE	NO_TEST=1	NC_WLAN_PERST_L
15	NC_SPIROM_USE_MLB	MAKE_BASE=TRUE	NO_TEST=1	NC_SPIROM_USE_MLB
14	NC_SPI_PCHROM_MOSI	MAKE_BASE=TRUE	NO_TEST=1	NC_SPI_PCHROM_MOSI
14	NC_SPI_PCHROM_MISO	MAKE_BASE=TRUE	NO_TEST=1	NC_SPI_PCHROM_MISO
14	NC_SPI_PCHROM_IO<2>	MAKE_BASE=TRUE	NO_TEST=1	NC_SPI_PCHROM_IO<2>
14	NC_SPI_PCHROM_CS_L	MAKE_BASE=TRUE	NO_TEST=1	NC_SPI_PCHROM_CS_L
14	NC_SPI_PCHROM_CLK	MAKE_BASE=TRUE	NO_TEST=1	NC_SPI_PCHROM_CLK
36	NC_SPI_DFR_MOSI_R	MAKE_BASE=TRUE	NO_TEST=1	NC_SPI_DFR_MOSI_R
36	NC_SPI_DFR_MISO	MAKE_BASE=TRUE	NO_TEST=1	NC_SPI_DFR_MISO
36	NC_SPI_DFR_CS_L	MAKE_BASE=TRUE	NO_TEST=1	NC_SPI_DFR_CS_L
36	NC_SPI_DFR_CLK_R	MAKE_BASE=TRUE	NO_TEST=1	NC_SPI_DFR_CLK_R
35	NC_SPI_DESCRIPTOR_OVERRIDE_L	MAKE_BASE=TRUE	NO_TEST=1	NC_SPI_DESCRIPTOR_OVERRIDE_L
[illegible]	NC_SMC_TOPBLK_SWP_L	MAKE_BASE=TRUE	NO_TEST=1	NC_SMC_TOPBLK_SWP_L
[illegible]	NC_PCHROM_SW_EN	MAKE_BASE=TRUE	NO_TEST=1	NC_PCHROM_SW_EN
[illegible]	NC_PCH_STRP_TOPBLK_SWP_L	MAKE_BASE=TRUE	NO_TEST=1	NC_PCH_STRP_TOPBLK_SWP_L

16	PU_DEBUG_CLKREQ_L	MAKE_BASE=TRUE	PU_DEBUG_CLKREQ_L
35	TP_SWD_WLAN_SWDIO	MAKE_BASE=TRUE	TP_SWD_WLAN_SWDIO
35	TP_SWD_WLAN_SWCLK	MAKE_BASE=TRUE	TP_SWD_WLAN_SWCLK

Grounded Signals

36	GND	MAKE_BASE=TRUE
36	GND	
36	GND	
36	GND	
36	GND	
36	GND	
36	GND	
36	GND	
65	GND	

PMIC GPIO Config Select

65	P2V7NAND_PGOOD	MAKE_BASE=TRUE	P2V7NAND_PGOOD	73
65	P2V7NAND_EN	MAKE_BASE=TRUE	P2V7NAND_EN	73
65	NAND_DISCHARGE_EN	MAKE_BASE=TRUE	NAND_DISCHARGE_EN	74
65	NAND_RESET_L	MAKE_BASE=TRUE	NAND_RESET_L	74
65	UVP_DIS_L	MAKE_BASE=TRUE	UVP_DIS_L	43

苹果最新图纸

PAGE TITLE
Signal Aliases

Apple Inc.

DRAWING NUMBER 051-04039 SIZE D
REVISION 2.0.0
BRANCH
PAGE 122 OF 145
SHEET 77 OF 85

NOTICE OF PROPRIETARY PROPERTY:
THE INFORMATION CONTAINED HEREIN IS THE PROPRIETARY PROPERTY OF APPLE INC.
THE POSESSOR AGREES TO THE FOLLOWING:
I TO MAINTAIN THIS DOCUMENT IN CONFIDENCE
II NOT TO REPRODUCE OR COPY IT
III NOT TO REVEAL OR PUBLISH IT IN WHOLE OR PART
IV ALL RIGHTS RESERVED

Memory Bit/Byte Swizzle

MAKE_BASE

MEM_A_DQ<39>	TRUE	MEM_A_DQ<39>	B1
MEM_A_DQ<37>	TRUE	MEM_A_DQ<37>	B1
MEM_A_DQ<33>	TRUE	MEM_A_DQ<33>	B1
MEM_A_DQ<36>	TRUE	MEM_A_DQ<36>	B1
MEM_A_DQ<38>	TRUE	MEM_A_DQ<38>	B1
MEM_A_DQ<34>	TRUE	MEM_A_DQ<34>	B1
MEM_A_DQ<32>	TRUE	MEM_A_DQ<32>	B1
MEM_A_DQ<35>	TRUE	MEM_A_DQ<35>	B1
MEM_A_DQ<47>	TRUE	MEM_A_DQ<47>	B1
MEM_A_DQ<46>	TRUE	MEM_A_DQ<46>	B1
MEM_A_DQ<42>	TRUE	MEM_A_DQ<42>	B1
MEM_A_DQ<41>	TRUE	MEM_A_DQ<41>	B1
MEM_A_DQ<43>	TRUE	MEM_A_DQ<43>	B1
MEM_A_DQ<45>	TRUE	MEM_A_DQ<45>	B1
MEM_A_DQ<40>	TRUE	MEM_A_DQ<40>	B1
MEM_A_DQ<44>	TRUE	MEM_A_DQ<44>	B1
MEM_A_DQ<52>	TRUE	MEM_A_DQ<52>	B1
MEM_A_DQ<51>	TRUE	MEM_A_DQ<51>	B1
MEM_A_DQ<55>	TRUE	MEM_A_DQ<55>	B1
MEM_A_DQ<54>	TRUE	MEM_A_DQ<54>	B1
MEM_A_DQ<53>	TRUE	MEM_A_DQ<53>	B1
MEM_A_DQ<48>	TRUE	MEM_A_DQ<48>	B1
MEM_A_DQ<50>	TRUE	MEM_A_DQ<50>	B1
MEM_A_DQ<49>	TRUE	MEM_A_DQ<49>	B1
MEM_A_DQ<57>	TRUE	MEM_A_DQ<57>	B1
MEM_A_DQ<62>	TRUE	MEM_A_DQ<62>	B1
MEM_A_DQ<60>	TRUE	MEM_A_DQ<60>	B1
MEM_A_DQ<63>	TRUE	MEM_A_DQ<63>	B1
MEM_A_DQ<59>	TRUE	MEM_A_DQ<59>	B1
MEM_A_DQ<56>	TRUE	MEM_A_DQ<56>	B1
MEM_A_DQ<61>	TRUE	MEM_A_DQ<61>	B1
MEM_A_DQ<58>	TRUE	MEM_A_DQ<58>	B1
MEM_A_DQ<6>	TRUE	MEM_A_DQ<6>	B1
MEM_A_DQ<7>	TRUE	MEM_A_DQ<7>	B1
MEM_A_DQ<2>	TRUE	MEM_A_DQ<2>	B1
MEM_A_DQ<3>	TRUE	MEM_A_DQ<3>	B1
MEM_A_DQ<1>	TRUE	MEM_A_DQ<1>	B1
MEM_A_DQ<4>	TRUE	MEM_A_DQ<4>	B1
MEM_A_DQ<5>	TRUE	MEM_A_DQ<5>	B1
MEM_A_DQ<0>	TRUE	MEM_A_DQ<0>	B1
MEM_A_DQ<8>	TRUE	MEM_A_DQ<8>	B1
MEM_A_DQ<12>	TRUE	MEM_A_DQ<12>	B1
MEM_A_DQ<9>	TRUE	MEM_A_DQ<9>	B1
MEM_A_DQ<14>	TRUE	MEM_A_DQ<14>	B1
MEM_A_DQ<11>	TRUE	MEM_A_DQ<11>	B1
MEM_A_DQ<15>	TRUE	MEM_A_DQ<15>	B1
MEM_A_DQ<13>	TRUE	MEM_A_DQ<13>	B1
MEM_A_DQ<10>	TRUE	MEM_A_DQ<10>	B1
MEM_A_DQ<20>	TRUE	MEM_A_DQ<20>	B1
MEM_A_DQ<19>	TRUE	MEM_A_DQ<19>	B1
MEM_A_DQ<16>	TRUE	MEM_A_DQ<16>	B1
MEM_A_DQ<17>	TRUE	MEM_A_DQ<17>	B1
MEM_A_DQ<22>	TRUE	MEM_A_DQ<22>	B1
MEM_A_DQ<18>	TRUE	MEM_A_DQ<18>	B1
MEM_A_DQ<21>	TRUE	MEM_A_DQ<21>	B1
MEM_A_DQ<23>	TRUE	MEM_A_DQ<23>	B1
MEM_A_DQ<24>	TRUE	MEM_A_DQ<24>	B1
MEM_A_DQ<30>	TRUE	MEM_A_DQ<30>	B1
MEM_A_DQ<27>	TRUE	MEM_A_DQ<27>	B1
MEM_A_DQ<26>	TRUE	MEM_A_DQ<26>	B1
MEM_A_DQ<28>	TRUE	MEM_A_DQ<28>	B1
MEM_A_DQ<31>	TRUE	MEM_A_DQ<31>	B1
MEM_A_DQ<25>	TRUE	MEM_A_DQ<25>	B1
MEM_A_DQ<29>	TRUE	MEM_A_DQ<29>	B1
MEM_A_DQS_P<4>	TRUE	MEM_A_DQS_P<4>	B1
MEM_A_DQS_N<4>	TRUE	MEM_A_DQS_N<4>	B1
MEM_A_DQS_P<5>	TRUE	MEM_A_DQS_P<5>	B1
MEM_A_DQS_N<5>	TRUE	MEM_A_DQS_N<5>	B1
MEM_A_DQS_P<6>	TRUE	MEM_A_DQS_P<6>	B1
MEM_A_DQS_N<6>	TRUE	MEM_A_DQS_N<6>	B1
MEM_A_DQS_P<7>	TRUE	MEM_A_DQS_P<7>	B1
MEM_A_DQS_N<7>	TRUE	MEM_A_DQS_N<7>	B1
MEM_A_DQS_P<0>	TRUE	MEM_A_DQS_P<0>	B1
MEM_A_DQS_N<0>	TRUE	MEM_A_DQS_N<0>	B1
MEM_A_DQS_P<1>	TRUE	MEM_A_DQS_P<1>	B1
MEM_A_DQS_N<1>	TRUE	MEM_A_DQS_N<1>	B1
MEM_A_DQS_P<2>	TRUE	MEM_A_DQS_P<2>	B1
MEM_A_DQS_N<2>	TRUE	MEM_A_DQS_N<2>	B1
MEM_A_DQS_P<3>	TRUE	MEM_A_DQS_P<3>	B1
MEM_A_DQS_N<3>	TRUE	MEM_A_DQS_N<3>	B1

MAKE_BASE

MEM_B_DQ<22>	TRUE	MEM_B_DQ<22>	B1
MEM_B_DQ<16>	TRUE	MEM_B_DQ<16>	B1
MEM_B_DQ<18>	TRUE	MEM_B_DQ<18>	B1
MEM_B_DQ<23>	TRUE	MEM_B_DQ<23>	B1
MEM_B_DQ<17>	TRUE	MEM_B_DQ<17>	B1
MEM_B_DQ<20>	TRUE	MEM_B_DQ<20>	B1
MEM_B_DQ<21>	TRUE	MEM_B_DQ<21>	B1
MEM_B_DQ<19>	TRUE	MEM_B_DQ<19>	B1
MEM_B_DQ<25>	TRUE	MEM_B_DQ<25>	B1
MEM_B_DQ<24>	TRUE	MEM_B_DQ<24>	B1
MEM_B_DQ<26>	TRUE	MEM_B_DQ<26>	B1
MEM_B_DQ<30>	TRUE	MEM_B_DQ<30>	B1
MEM_B_DQ<28>	TRUE	MEM_B_DQ<28>	B1
MEM_B_DQ<29>	TRUE	MEM_B_DQ<29>	B1
MEM_B_DQ<31>	TRUE	MEM_B_DQ<31>	B1
MEM_B_DQ<27>	TRUE	MEM_B_DQ<27>	B1
MEM_B_DQ<55>	TRUE	MEM_B_DQ<55>	B1
MEM_B_DQ<50>	TRUE	MEM_B_DQ<50>	B1
MEM_B_DQ<48>	TRUE	MEM_B_DQ<48>	B1
MEM_B_DQ<53>	TRUE	MEM_B_DQ<53>	B1
MEM_B_DQ<51>	TRUE	MEM_B_DQ<51>	B1
MEM_B_DQ<52>	TRUE	MEM_B_DQ<52>	B1
MEM_B_DQ<54>	TRUE	MEM_B_DQ<54>	B1
MEM_B_DQ<49>	TRUE	MEM_B_DQ<49>	B1
MEM_B_DQ<57>	TRUE	MEM_B_DQ<57>	B1
MEM_B_DQ<56>	TRUE	MEM_B_DQ<56>	B1
MEM_B_DQ<59>	TRUE	MEM_B_DQ<59>	B1
MEM_B_DQ<62>	TRUE	MEM_B_DQ<62>	B1
MEM_B_DQ<60>	TRUE	MEM_B_DQ<60>	B1
MEM_B_DQ<61>	TRUE	MEM_B_DQ<61>	B1
MEM_B_DQ<58>	TRUE	MEM_B_DQ<58>	B1
MEM_B_DQ<63>	TRUE	MEM_B_DQ<63>	B1
MEM_B_DQ<2>	TRUE	MEM_B_DQ<2>	B1
MEM_B_DQ<0>	TRUE	MEM_B_DQ<0>	B1
MEM_B_DQ<4>	TRUE	MEM_B_DQ<4>	B1
MEM_B_DQ<1>	TRUE	MEM_B_DQ<1>	B1
MEM_B_DQ<6>	TRUE	MEM_B_DQ<6>	B1
MEM_B_DQ<5>	TRUE	MEM_B_DQ<5>	B1
MEM_B_DQ<7>	TRUE	MEM_B_DQ<7>	B1
MEM_B_DQ<3>	TRUE	MEM_B_DQ<3>	B1
MEM_B_DQ<11>	TRUE	MEM_B_DQ<11>	B1
MEM_B_DQ<14>	TRUE	MEM_B_DQ<14>	B1
MEM_B_DQ<9>	TRUE	MEM_B_DQ<9>	B1
MEM_B_DQ<15>	TRUE	MEM_B_DQ<15>	B1
MEM_B_DQ<13>	TRUE	MEM_B_DQ<13>	B1
MEM_B_DQ<10>	TRUE	MEM_B_DQ<10>	B1
MEM_B_DQ<8>	TRUE	MEM_B_DQ<8>	B1
MEM_B_DQ<12>	TRUE	MEM_B_DQ<12>	B1
MEM_B_DQ<35>	TRUE	MEM_B_DQ<35>	B1
MEM_B_DQ<37>	TRUE	MEM_B_DQ<37>	B1
MEM_B_DQ<33>	TRUE	MEM_B_DQ<33>	B1
MEM_B_DQ<32>	TRUE	MEM_B_DQ<32>	B1
MEM_B_DQ<38>	TRUE	MEM_B_DQ<38>	B1
MEM_B_DQ<39>	TRUE	MEM_B_DQ<39>	B1
MEM_B_DQ<36>	TRUE	MEM_B_DQ<36>	B1
MEM_B_DQ<34>	TRUE	MEM_B_DQ<34>	B1
MEM_B_DQ<47>	TRUE	MEM_B_DQ<47>	B1
MEM_B_DQ<45>	TRUE	MEM_B_DQ<45>	B1
MEM_B_DQ<46>	TRUE	MEM_B_DQ<46>	B1
MEM_B_DQ<41>	TRUE	MEM_B_DQ<41>	B1
MEM_B_DQ<43>	TRUE	MEM_B_DQ<43>	B1
MEM_B_DQ<42>	TRUE	MEM_B_DQ<42>	B1
MEM_B_DQ<40>	TRUE	MEM_B_DQ<40>	B1
MEM_B_DQ<44>	TRUE	MEM_B_DQ<44>	B1
MEM_B_DQS_P<2>	TRUE	MEM_B_DQS_P<2>	B1
MEM_B_DQS_N<2>	TRUE	MEM_B_DQS_N<2>	B1
MEM_B_DQS_P<3>	TRUE	MEM_B_DQS_P<3>	B1
MEM_B_DQS_N<3>	TRUE	MEM_B_DQS_N<3>	B1
MEM_B_DQS_P<6>	TRUE	MEM_B_DQS_P<6>	B1
MEM_B_DQS_N<6>	TRUE	MEM_B_DQS_N<6>	B1
MEM_B_DQS_P<7>	TRUE	MEM_B_DQS_P<7>	B1
MEM_B_DQS_N<7>	TRUE	MEM_B_DQS_N<7>	B1
MEM_B_DQS_P<0>	TRUE	MEM_B_DQS_P<0>	B1
MEM_B_DQS_N<0>	TRUE	MEM_B_DQS_N<0>	B1
MEM_B_DQS_P<1>	TRUE	MEM_B_DQS_P<1>	B1
MEM_B_DQS_N<1>	TRUE	MEM_B_DQS_N<1>	B1
MEM_B_DQS_P<4>	TRUE	MEM_B_DQS_P<4>	B1
MEM_B_DQS_N<4>	TRUE	MEM_B_DQS_N<4>	B1
MEM_B_DQS_P<5>	TRUE	MEM_B_DQS_P<5>	B1
MEM_B_DQS_N<5>	TRUE	MEM_B_DQS_N<5>	B1

苹果最新图纸

SYNC_MASTER=J122_MLB SYNC_DATE=04/13/2018

PAGE TITLE
Memory Signal Swaps

Apple Inc.

DRAWING NUMBER 051-04039 SIZE D

REVISION 2.0.0

BRANCH

PAGE 123 OF 145

SHEET 78 OF 85

NOTICE OF PROPRIETARY PROPERTY:
THE INFORMATION CONTAINED HEREIN IS THE PROPRIETARY PROPERTY OF APPLE INC.
THE POSESSOR AGREES TO THE FOLLOWING:
I TO MAINTAIN THIS DOCUMENT IN CONFIDENCE
II NOT TO REPRODUCE OR COPY IT
III NOT TO REVEAL OR PUBLISH IT IN WHOLE OR PART
IV ALL RIGHTS RESERVED

DFU/SoC/SWDL

TP_USB3_EXTB_D2R_N → TPDC4B3
TP_USB3_EXTB_D2R_P → TPDC4B2
TP_USB3_EXTB_R2D_C_N → TPDC4B1
TP_USB3_EXTB_R2D_C_P → TPDC4B0

DC4B0 SESDL2011 DSN2 CRITICAL
DC4B1 SESDL2011 DSN2 CRITICAL
DC4B2 SESDL2011 DSN2 CRITICAL
DC4B3 SESDL2011 DSN2 CRITICAL

TP_USB_EXTC_N → TPDC450
TP_USB_EXTC_P → TPDC451

DC450 ESD9011-COMBO X1D002 CRITICAL
DC451 ESD9011-COMBO X1D001 CRITICAL

TPDC4B7
TPDC4B6
TPDC4B5
TPDC4B4

SOC_USB_VBUS
SOC_FORCE_DFU
USB_SOC_N
USB_SOC_P
SOC_DFU_STATUS
SOC_DOCK_CONNECT
SOC_COLD_RESET_L
GND 7x

Debug

PCH_UART_DEBUG_D2R
PCH_UART_DEBUG_R2D
DBGMUX_SWD_SOC_CLK
DBGMUX_SWD_SOC_IO
TP_SOC_DEBUGPRT_RX → TP_SOC_DEBUGPRT_RX
TP_SOC_DEBUGPRT_TX → TP_SOC_DEBUGPRT_TX
TP_JTAG_SOC_TDI
TP_JTAG_SOC_TDO
I2C_PWR_SCL
I2C_PWR_SDA
TP_SMC_DEBUGPRT_RX → TP_SMC_DEBUGPRT_RX
TP_SMC_DEBUGPRT_TX → TP_SMC_DEBUGPRT_TX

SSD

TP_SSD0_S4E1_UART_TX → TP_SSD0_S4E1_UART_TX
TP_SSD0_S4E2_UART_TX → TP_SSD0_S4E2_UART_TX
TP_SSD0_S4E0_UART_TX → TP_SSD0_S4E0_UART_TX
TP_SSD0_S4E0_JTAG_TDI → TP_SSD0_S4E0_JTAG_TDI

Display

To be probed at connector

Backlight

EDP_BKLT_EN
EDP_BKLT_PWM
PPVIN_S0SW_LCDBKLT_R
PPVOUT_S0_LCDBKLT

I2C_BKLT_SCL
I2C_BKLT_SDA
GND 5x

Power

PP20V_USBC_XA_VBUS
PP20V_USBC_XB_VBUS
PPDCIN_G3H
PPDCIN_G3H_CHGR_AMON
PPBUS_G3H
PP1V8_SLPS2R
PP1V1_SLPDDR
PP1V8_AWAKE
PP3V3_G3H_RTC
PP3V3_G3H
PP3V_G3H
PP5V_G3S
PP3V3_G3S
PP1V8_G3S
PP1V8_S5
PP1V8_S3
PP1V2_S3

PP2V7_NAND
PP1V8_SSD
PP0V9_SSD
PP3V3_TBT_X_S0
PP3V3_TBT_X_SX

PP1V2_S0SW
PP1V_PRIM

PP1V2_AWAKE
PP0V82_SLPDDR
PPVDDCPU_AWAKE
PPVCC_PRIM_CORE
PPVCC_S0_CPU
TP_SMC_FIXTURE_MODE_L → TP_SMC_FIXTURE_MODE_L
GND

RIO – Speaker (R), Mesa, Headphone

SPI_MESA_CLK
SPI_MESA_MISO
SPI_MESA_MOSI
MESA_INT
MESA_PWR_EN
PMU_ONOFF_L
AUD_PWR_EN
I2S_CODEC_LRCLK
I2S_CODEC_R2D
I2S_CODEC_D2R
I2S_CODEC_BCLK
CODEC_INT_L
CODEC_WAKE_L
CODEC_RESET_L
SPKRAMP_RESET_L
SPKRAMP_INT_L
I2C_SPKRAMP_R_SDA
I2C_SPKRAMP_R_SCL
I2S_SPKRAMP_R_R2D
I2S_SPKRAMP_L_D2R
I2S_SPKRAMP_R_LRCLK_R
I2S_SPKRAMP_R_BCLK
SPKR_ID1
SMC_LID_RIGHT
PPBUS_G3H
PP3V3_G3S
PP1V8_G3S
PP1V8_SLPS2R
GND x

AMR/Mic

PDM_DMIC_CLK0
PDM_DMIC_DATA0_ISOL
PDM_DMIC_CLK1
PDM_DMIC_DATA1_ISOL
SMC_LID_LEFT
PP1V8_G3S
PP1V8_SLPS2R
GND 1x

Speaker (L)

SPKRCONN_L_OUTP
SPKRCONN_L_OUTN
SPKR_ID0
GND 1x

Fan

FAN_LT_PWM
FAN_LT_TACH
PP5V_G3S
GND 1x

Battery

CHGR_HPWR_EN_L
SMBUS_3V3_BATT_SCL
SMBUS_3V3_BATT_SDA
SYS_DETECT
SYS_DETECT_L
CHGR_BMON
PPVBAT_G3H_CHGR_R
PPVBAT_G3H_CONN 5x
GND 5x

USBC

TP_O3100_DRAIN
TP_O3200_DRAIN
GND 5x

IPD

PMU_ONOFF_L
IPD_LID_OPEN
PMU_RSLOC_RST_L
I2C_TPAD_3V3_SCL
I2C_TPAD_3V3_SDA
SPI_TPAD_3V3_CLK
SPI_TPAD_3V3_CS_L
SPI_TPAD_3V3_MISO
SPI_TPAD_3V3_MOSI
TPAD_3V3_ACTUATOR_DISABLE_L
TPAD_SPI_3V3_EN
TPAD_SPI_3V3_INT_L
TPAD_KBD_3V3_WAKE_L
PPBUS_G3H_TPAD_FLT
PP5V_G3S_IPD_F
PP3V3_G3H_IPD_F
PP3V3_G3S_IPD_F
GND 2x

Wireless

WLAN_AUDIO_SYNC
UART_BT_MUX_R2D
UART_BT_MUX_D2R
UART_BT_MUX_CTS_L
UART_BT_MUX_RTS_L
SPI_BT_CLK
SPI_BT_CS_L
SPI_BT_MOSI
SPI_BT_MISO
WLAN_HOST_WAKE
WLAN_CONTEXT_A
WLAN_CONTEXT_B
WLAN_THROTTLE
WLAN_AUDIO_SYNC
TP_JTAG_WLAN_TCK
TP_JTAG_WLAN_TMS
TP_JTAG_WLAN_TRST
TP_BT_GPIO4
ACCEL_INT1
ACCEL_INT2
PP3V3_G3S_WLANBT
GND

Power Sequencing

PLT_RST_L
PM_PCH_SYS_PWROK
PM_SLP_S0_L
PM_SLP_S3_L
PM_SLP_S4_L
PM_SLP_S5_L
PVDDQ_PGOOD
PVDDQ_EN
PMU_ACTIVE_READY
P1V1_SLPDDR_SOCFET_EN

P1V8G3S_EN
SMC_PCH_SYS_PWROK
SOC_SOCHOT_L

苹果最新图纸

BOM_COST_GROUP=DEBUG

PAGE TITLE	ICT FCT
Apple Inc.	DRAWING NUMBER 051-04039 · SIZE D
	REVISION 2.0.0
	BRANCH
	PAGE 124 OF 145
	SHEET 79 OF 85

NOTICE OF PROPRIETARY PROPERTY:
THE INFORMATION CONTAINED HEREIN IS THE PROPRIETARY PROPERTY OF APPLE INC.
THE POSESSOR AGREES TO THE FOLLOWING:
I TO MAINTAIN THIS DOCUMENT IN CONFIDENCE
II NOT TO REPRODUCE OR COPY IT
III NOT TO REVEAL OR PUBLISH IT IN WHOLE OR PART
IV ALL RIGHTS RESERVED

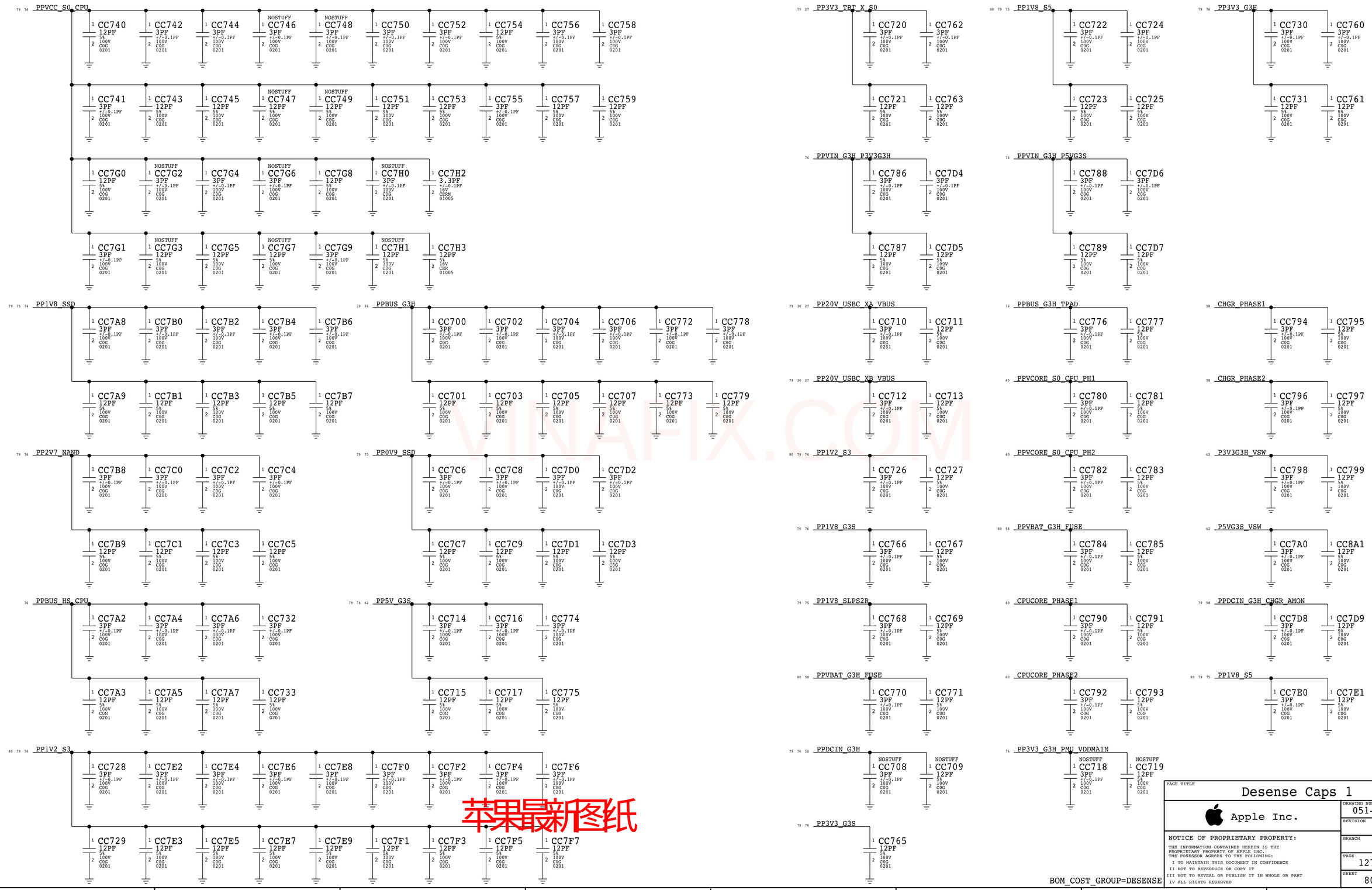
PPVCC_S0_CPU
CC740 12PF 5% 100V C0G 0201
CC742 3PF +/-0.1PF 100V C0G 0201
CC744 3PF +/-0.1PF 100V C0G 0201
NOSTUFF CC746 3PF +/-0.1PF 100V C0G 0201
NOSTUFF CC748 3PF +/-0.1PF 100V C0G 0201
CC750 3PF +/-0.1PF 100V C0G 0201
CC752 3PF +/-0.1PF 100V C0G 0201
CC754 12PF 5% 100V C0G 0201
CC756 3PF +/-0.1PF 100V C0G 0201
CC758 3PF +/-0.1PF 100V C0G 0201
CC741 3PF +/-0.1PF 100V C0G 0201
CC743 12PF 5% 100V C0G 0201
CC745 12PF 5% 100V C0G 0201
NOSTUFF CC747 12PF 5% 100V C0G 0201
NOSTUFF CC749 12PF 5% 100V C0G 0201
CC751 12PF 5% 100V C0G 0201
CC753 12PF 5% 100V C0G 0201
CC755 3PF +/-0.1PF 100V C0G 0201
CC757 12PF 5% 100V C0G 0201
CC759 12PF 5% 100V C0G 0201
CC7G0 12PF 5% 100V C0G 0201
NOSTUFF CC7G2 3PF +/-0.1PF 100V C0G 0201
CC7G4 3PF +/-0.1PF 100V C0G 0201
NOSTUFF CC7G6 3PF +/-0.1PF 100V C0G 0201
CC7G8 12PF 5% 100V C0G 0201
NOSTUFF CC7H0 3PF +/-0.1PF 100V C0G 0201
CC7H2 3.3PF +/-0.1PF 16V CERM 01005
CC7G1 3PF +/-0.1PF 100V C0G 0201
NOSTUFF CC7G3 12PF 5% 100V C0G 0201
CC7G5 12PF 5% 100V C0G 0201
NOSTUFF CC7G7 12PF 5% 100V C0G 0201
CC7G9 3PF +/-0.1PF 100V C0G 0201
NOSTUFF CC7H1 12PF 5% 100V C0G 0201
CC7H3 12PF 5% 16V CER 01005
PP1V8_SSD
CC7A8 3PF +/-0.1PF 100V C0G 0201
CC7B0 3PF +/-0.1PF 100V C0G 0201
CC7B2 3PF +/-0.1PF 100V C0G 0201
CC7B4 3PF +/-0.1PF 100V C0G 0201
CC7B6 3PF +/-0.1PF 100V C0G 0201
CC7A9 12PF 5% 100V C0G 0201
CC7B1 12PF 5% 100V C0G 0201
CC7B3 12PF 5% 100V C0G 0201
CC7B5 12PF 5% 100V C0G 0201
CC7B7 12PF 5% 100V C0G 0201
PPBUS_G3H
CC700 3PF +/-0.1PF 100V C0G 0201
CC702 3PF +/-0.1PF 100V C0G 0201
CC704 3PF +/-0.1PF 100V C0G 0201
CC706 3PF +/-0.1PF 100V C0G 0201
CC772 3PF +/-0.1PF 100V C0G 0201
CC778 3PF +/-0.1PF 100V C0G 0201
CC701 12PF 5% 100V C0G 0201
CC703 12PF 5% 100V C0G 0201
CC705 12PF 5% 100V C0G 0201
CC707 12PF 5% 100V C0G 0201
CC773 12PF 5% 100V C0G 0201
CC779 12PF 5% 100V C0G 0201
PP2V7_NAND
CC7B8 3PF +/-0.1PF 100V C0G 0201
CC7C0 3PF +/-0.1PF 100V C0G 0201
CC7C2 3PF +/-0.1PF 100V C0G 0201
CC7C4 3PF +/-0.1PF 100V C0G 0201
CC7B9 12PF 5% 100V C0G 0201
CC7C1 12PF 5% 100V C0G 0201
CC7C3 12PF 5% 100V C0G 0201
CC7C5 12PF 5% 100V C0G 0201
PP0V9_SSD
CC7C6 3PF +/-0.1PF 100V C0G 0201
CC7C8 3PF +/-0.1PF 100V C0G 0201
CC7D0 3PF +/-0.1PF 100V C0G 0201
CC7D2 3PF +/-0.1PF 100V C0G 0201
CC7C7 12PF 5% 100V C0G 0201
CC7C9 12PF 5% 100V C0G 0201
CC7D1 12PF 5% 100V C0G 0201
CC7D3 12PF 5% 100V C0G 0201
PPBUS_HS_CPU
CC7A2 3PF +/-0.1PF 100V C0G 0201
CC7A4 3PF +/-0.1PF 100V C0G 0201
CC7A6 3PF +/-0.1PF 100V C0G 0201
CC732 3PF +/-0.1PF 100V C0G 0201
CC7A3 12PF 5% 100V C0G 0201
CC7A5 12PF 5% 100V C0G 0201
CC7A7 12PF 5% 100V C0G 0201
CC733 12PF 5% 100V C0G 0201
PP5V_G3S
CC714 3PF +/-0.1PF 100V C0G 0201
CC716 3PF +/-0.1PF 100V C0G 0201
CC774 3PF +/-0.1PF 100V C0G 0201
CC715 12PF 5% 100V C0G 0201
CC717 12PF 5% 100V C0G 0201
CC775 12PF 5% 100V C0G 0201
PP1V2_S3
CC728 3PF +/-0.1PF 100V C0G 0201
CC7E2 3PF +/-0.1PF 100V C0G 0201
CC7E4 3PF +/-0.1PF 100V C0G 0201
CC7E6 3PF +/-0.1PF 100V C0G 0201
CC7E8 3PF +/-0.1PF 100V C0G 0201
CC7F0 3PF +/-0.1PF 100V C0G 0201
CC7F2 3PF +/-0.1PF 100V C0G 0201
CC7F4 3PF +/-0.1PF 100V C0G 0201
CC7F6 3PF +/-0.1PF 100V C0G 0201
CC729 12PF 5% 100V C0G 0201
CC7E3 12PF 5% 100V C0G 0201
CC7E5 12PF 5% 100V C0G 0201
CC7E7 12PF 5% 100V C0G 0201
CC7E9 12PF 5% 100V C0G 0201
CC7F1 12PF 5% 100V C0G 0201
CC7F3 12PF 5% 100V C0G 0201
CC7F5 12PF 5% 100V C0G 0201
CC7F7 12PF 5% 100V C0G 0201
PP3V3_TBT_X_S0
CC720 3PF +/-0.1PF 100V C0G 0201
CC762 3PF +/-0.1PF 100V C0G 0201
CC721 12PF 5% 100V C0G 0201
CC763 12PF 5% 100V C0G 0201
PP1V8_S5
CC722 3PF +/-0.1PF 100V C0G 0201
CC724 3PF +/-0.1PF 100V C0G 0201
CC723 12PF 5% 100V C0G 0201
CC725 12PF 5% 100V C0G 0201
PP3V3_G3H
CC730 3PF +/-0.1PF 100V C0G 0201
CC760 3PF +/-0.1PF 100V C0G 0201
CC731 12PF 5% 100V C0G 0201
CC761 12PF 5% 100V C0G 0201
PPVIN_G3H_P3V3G3H
CC786 3PF +/-0.1PF 100V C0G 0201
CC7D4 3PF +/-0.1PF 100V C0G 0201
CC787 12PF 5% 100V C0G 0201
CC7D5 12PF 5% 100V C0G 0201
PPVIN_G3H_P5VG3S
CC788 3PF +/-0.1PF 100V C0G 0201
CC7D6 3PF +/-0.1PF 100V C0G 0201
CC789 12PF 5% 100V C0G 0201
CC7D7 12PF 5% 100V C0G 0201
PP20V_USBC_XA_VBUS
CC710 3PF +/-0.1PF 100V C0G 0201
CC711 12PF 5% 100V C0G 0201
PP20V_USBC_XB_VBUS
CC712 3PF +/-0.1PF 100V C0G 0201
CC713 12PF 5% 100V C0G 0201
PPBUS_G3H_TPAD
CC776 3PF +/-0.1PF 100V C0G 0201
CC777 12PF 5% 100V C0G 0201
CHGR_PHASE1
CC794 3PF +/-0.1PF 100V C0G 0201
CC795 12PF 5% 100V C0G 0201
PPVCORE_S0_CPU_PH1
CC780 3PF +/-0.1PF 100V C0G 0201
CC781 12PF 5% 100V C0G 0201
CHGR_PHASE2
CC796 3PF +/-0.1PF 100V C0G 0201
CC797 12PF 5% 100V C0G 0201
PP1V2_S3
CC726 3PF +/-0.1PF 100V C0G 0201
CC727 12PF 5% 100V C0G 0201
PPVCORE_S0_CPU_PH2
CC782 3PF +/-0.1PF 100V C0G 0201
CC783 12PF 5% 100V C0G 0201
P3V3G3H_VSW
CC798 3PF +/-0.1PF 100V C0G 0201
CC799 12PF 5% 100V C0G 0201
PP1V8_G3S
CC766 3PF +/-0.1PF 100V C0G 0201
CC767 12PF 5% 100V C0G 0201
PPVBAT_G3H_FUSE
CC784 3PF +/-0.1PF 100V C0G 0201
CC785 12PF 5% 100V C0G 0201
P5VG3S_VSW
CC7A0 3PF +/-0.1PF 100V C0G 0201
CC8A1 12PF 5% 100V C0G 0201
PP1V8_SLPS2R
CC768 3PF +/-0.1PF 100V C0G 0201
CC769 12PF 5% 100V C0G 0201
CPUCORE_PHASE1
CC790 3PF +/-0.1PF 100V C0G 0201
CC791 12PF 5% 100V C0G 0201
PPDCIN_G3H_CHGR_AMON
CC7D8 3PF +/-0.1PF 100V C0G 0201
CC7D9 12PF 5% 100V C0G 0201
PPVBAT_G3H_FUSE
CC770 3PF +/-0.1PF 100V C0G 0201
CC771 12PF 5% 100V C0G 0201
CPUCORE_PHASE2
CC792 3PF +/-0.1PF 100V C0G 0201
CC793 12PF 5% 100V C0G 0201
PP1V8_S5
CC7E0 3PF +/-0.1PF 100V C0G 0201
CC7E1 12PF 5% 100V C0G 0201
PPDCIN_G3H
NOSTUFF CC708 3PF +/-0.1PF 100V C0G 0201
NOSTUFF CC709 12PF 5% 100V C0G 0201
PP3V3_G3H_PMU_VDDMAIN
NOSTUFF CC718 3PF +/-0.1PF 100V C0G 0201
NOSTUFF CC719 12PF 5% 100V C0G 0201
PP3V3_G3S
CC765 12PF 5% 100V C0G 0201
BOM_COST_GROUP=DESENSE
PAGE TITLE
Desense Caps 1
Apple Inc.
DRAWING NUMBER 051-04039
SIZE D
REVISION 2.0.0
BRANCH
PAGE 127 OF 145
SHEET 80 OF 85
NOTICE OF PROPRIETARY PROPERTY:
THE INFORMATION CONTAINED HEREIN IS THE PROPRIETARY PROPERTY OF APPLE INC.
THE POSESSOR AGREES TO THE FOLLOWING:
I TO MAINTAIN THIS DOCUMENT IN CONFIDENCE
II NOT TO REPRODUCE OR COPY IT
III NOT TO REVEAL OR PUBLISH IT IN WHOLE OR PART
IV ALL RIGHTS RESERVED

苹果最新图纸

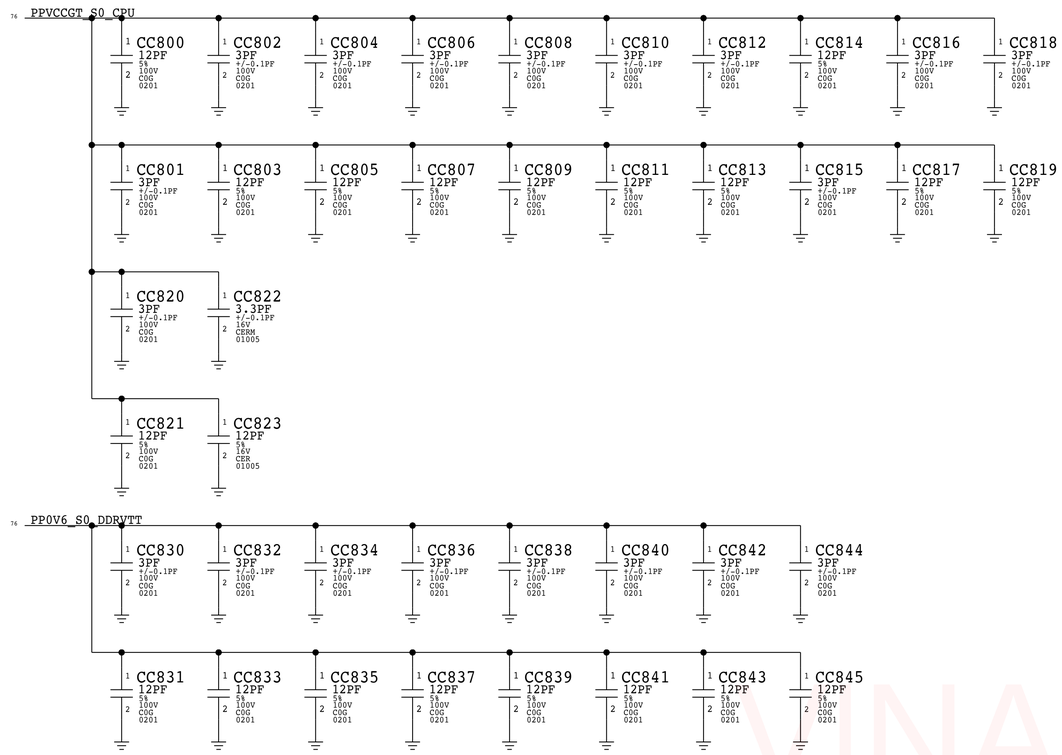

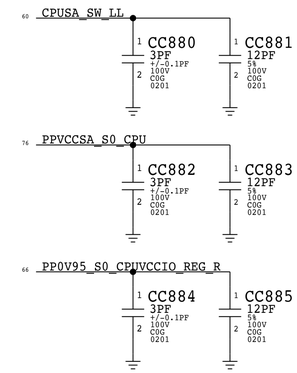

VINAFIX.COM

苹果最新图纸

BOM_COST_GROUP=DESENSE

PAGE TITLE: Desense Caps 2

Apple Inc.

DRAWING NUMBER: 051-04039 SIZE: D

REVISION: 2.0.0

BRANCH:

PAGE: 128 OF 145

SHEET: 81 OF 85

NOTICE OF PROPRIETARY PROPERTY:
THE INFORMATION CONTAINED HEREIN IS THE PROPRIETARY PROPERTY OF APPLE INC.
THE POSESSOR AGREES TO THE FOLLOWING:
I TO MAINTAIN THIS DOCUMENT IN CONFIDENCE
II NOT TO REPRODUCE OR COPY IT
III NOT TO REVEAL OR PUBLISH IT IN WHOLE OR PART
IV ALL RIGHTS RESERVED

Remote Sense Support

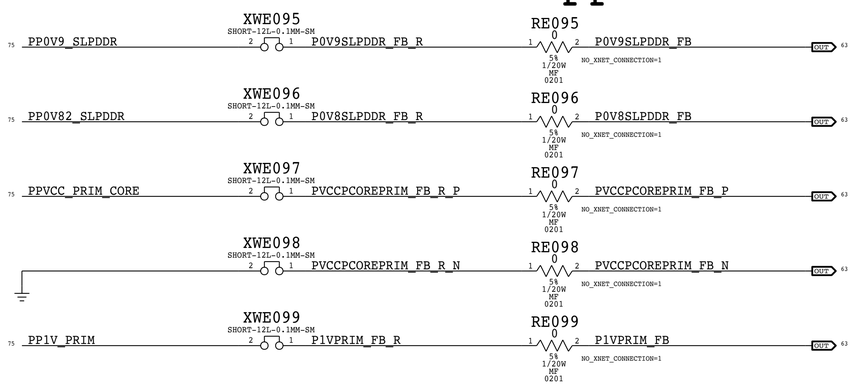

SOC State LEDs

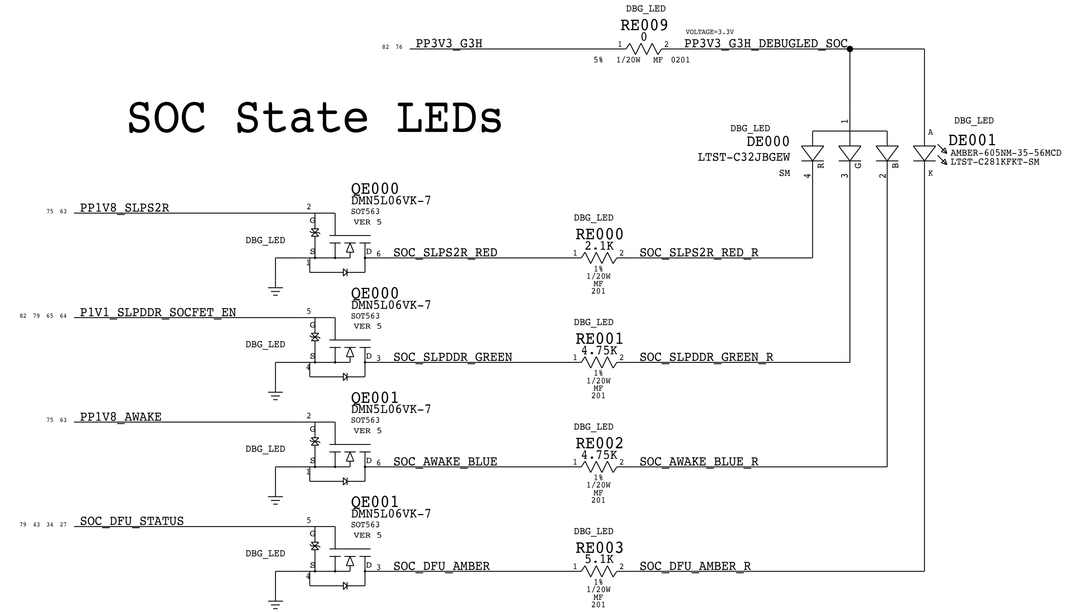

System State LED

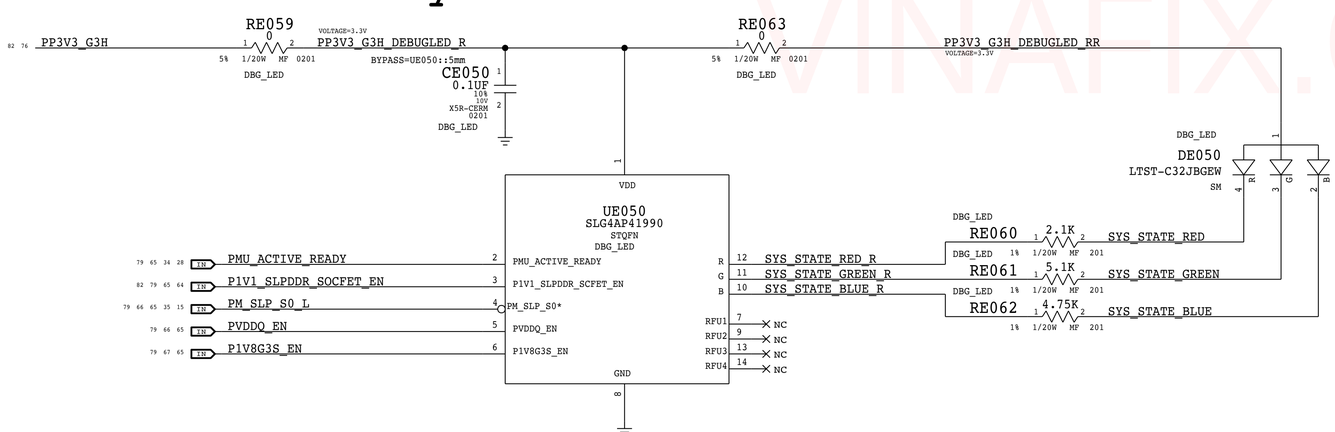

Dev Buttons

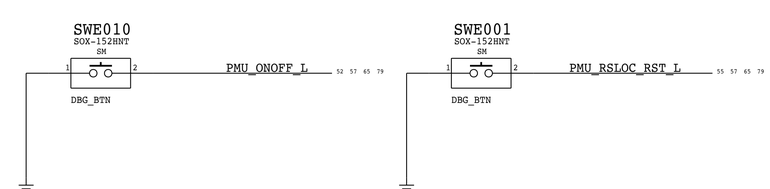

Inputs					Outputs			Color	State		
PMU ACT RDY	P1V1_SLPDDR SOCFET_EN	PM_SLP S0_L	PVDDQ EN	P1V8G3S EN	R	G	B		System	SoC	CPU
0	0	0	0	0	BLINK	OFF	OFF	Blinking Red	[illegible]	OFF	OFF
0	0	0	0	1	ON	OFF	OFF	Red	[illegible]	LPS2R	OFF
1	1	0	0	1	ON	ON	OFF	Yellow	[illegible]	[illegible]	OFF
0	0	0	1	1	ON	ON	ON	White	Sleep	SLPS2R	S0i
1	1	0	1	1	OFF	OFF	ON	Blue	Sleep	AWAKE	S0i
1	1	1	1	1	OFF	ON	OFF	Green	Run	AWAKE	S0
1	1	0	0	0	BLINK	ON	OFF	Blinking Yellow & Green			

All other states are magenta

VINAFIX.COM
苹果最新图纸

BOM_COST_GROUP=DEBUG

SYNC_MASTER=X589_BIGSUR SYNC_DATE=04/12/2017

PAGE TITLE
Dev Support

Apple Inc.

DRAWING NUMBER 051-04039 SIZE D
REVISION 2.0.0
BRANCH
PAGE 140 OF 145
SHEET 82 OF 85

NOTICE OF PROPRIETARY PROPERTY:
THE INFORMATION CONTAINED HEREIN IS THE PROPRIETARY PROPERTY OF APPLE INC.
THE POSESSOR AGREES TO THE FOLLOWING:
I TO MAINTAIN THIS DOCUMENT IN CONFIDENCE
II NOT TO REPRODUCE OR COPY IT
III NOT TO REVEAL OR PUBLISH IT IN WHOLE OR PART
IV ALL RIGHTS RESERVED

BOM Variants

BOM NUMBER	BOM NAME	BOM OPTIONS
685-00251	COMMON PARTS,MLB_BTTF,X1032	MLB_COMMON
985-00733	DEV PARTS,MLB_BTTF,X1032	DBG_BTN,DBG_LED,UPC_DBG_HDR
939-06596	PCBA,MLB-BTTF,DCDC,X1032	ALTERNATE,COMMON,DEV_PARTS_BOM,SCHEM,PCBF,CPU_AMLY:INTERPOSER,MLB_POWER,MLB_MISC,MLB_MECH1,PREEVT2

EEEE	BOM NUMBER	BOM NAME	BOM OPTIONS	
K6GN	639-06259	PCBA,MLB,BEST,HY-8G,SD-128G,X1032	CMN_PARTS_BOM,DEV_PARTS_BOM,ALTERNATE,CPU_AMLY:SREKN,DRAMCFG:HYNIX_8GB,NANDCFG:PMLC_128G_SD	
KLTM	639-06561	PCBA,MLB,BEST,HY-8G,TO-128G,X1032	CMN_PARTS_BOM,DEV_PARTS_BOM,ALTERNATE,CPU_AMLY:SREKN,DRAMCFG:HYNIX_8GB,NANDCFG:PMLC_128G_TO	
KLV0	639-06562	PCBA,MLB,BEST,MI-8G,SD-128G,X1032	CMN_PARTS_BOM,DEV_PARTS_BOM,ALTERNATE,CPU_AMLY:SREKN,DRAMCFG:MICRON_8GB,NANDCFG:PMLC_128G_SD	
KLVD	639-06563	PCBA,MLB,BEST,MI-8G,TO-128G,X1032	CMN_PARTS_BOM,DEV_PARTS_BOM,ALTERNATE,CPU_AMLY:SREKN,DRAMCFG:MICRON_8GB,NANDCFG:PMLC_128G_TO	
KLVV	639-06564	PCBA,MLB,BEST,SS-8G,SD-128G,X1032	CMN_PARTS_BOM,DEV_PARTS_BOM,ALTERNATE,CPU_AMLY:SREKN,DRAMCFG:SAMSUNG_8GB,NANDCFG:PMLC_128G_SD	Deactivated
KLW7	639-06565	PCBA,MLB,BEST,SS-8G,TO-128G,X1032	CMN_PARTS_BOM,DEV_PARTS_BOM,ALTERNATE,CPU_AMLY:SREKN,DRAMCFG:SAMSUNG_8GB,NANDCFG:PMLC_128G_TO	Deactivated
KLWL	639-06566	PCBA,MLB,BEST,HY-16G,SD-128G,X1032	CMN_PARTS_BOM,DEV_PARTS_BOM,ALTERNATE,CPU_AMLY:SREKN,DRAMCFG:HYNIX_16GB,NANDCFG:PMLC_128G_SD	
KLWY	639-06567	PCBA,MLB,BEST,HY-16G,TO-128G,X1032	CMN_PARTS_BOM,DEV_PARTS_BOM,ALTERNATE,CPU_AMLY:SREKN,DRAMCFG:HYNIX_16GB,NANDCFG:PMLC_128G_TO	
KLX9	639-06568	PCBA,MLB,BEST,MI-16G,SD-128G,X1032	CMN_PARTS_BOM,DEV_PARTS_BOM,ALTERNATE,CPU_AMLY:SREKN,DRAMCFG:MICRON_16GB,NANDCFG:PMLC_128G_SD	Deactivated
KLXN	639-06569	PCBA,MLB,BEST,MI-16G,TO-128G,X1032	CMN_PARTS_BOM,DEV_PARTS_BOM,ALTERNATE,CPU_AMLY:SREKN,DRAMCFG:MICRON_16GB,NANDCFG:PMLC_128G_TO	Deactivated
KLY1	639-06570	PCBA,MLB,BEST,SS-16G,SD-128G,X1032	CMN_PARTS_BOM,DEV_PARTS_BOM,ALTERNATE,CPU_AMLY:SREKN,DRAMCFG:SAMSUNG_16GB,NANDCFG:PMLC_128G_SD	Deactivated
KLYD	639-06571	PCBA,MLB,BEST,SS-16G,TO-128G,X1032	CMN_PARTS_BOM,DEV_PARTS_BOM,ALTERNATE,CPU_AMLY:SREKN,DRAMCFG:SAMSUNG_16GB,NANDCFG:PMLC_128G_TO	Deactivated
KLYQ	639-06572	PCBA,MLB,BEST,HY-8G,SD-256G,X1032	CMN_PARTS_BOM,DEV_PARTS_BOM,ALTERNATE,CPU_AMLY:SREKN,DRAMCFG:HYNIX_8GB,NANDCFG:PMLC_256G_SD	
KM04	639-06573	PCBA,MLB,BEST,HY-8G,TO-256G,X1032	CMN_PARTS_BOM,DEV_PARTS_BOM,ALTERNATE,CPU_AMLY:SREKN,DRAMCFG:HYNIX_8GB,NANDCFG:PMLC_256G_TO	
KM0L	639-06574	PCBA,MLB,BEST,MI-8G,SD-256G,X1032	CMN_PARTS_BOM,DEV_PARTS_BOM,ALTERNATE,CPU_AMLY:SREKN,DRAMCFG:MICRON_8GB,NANDCFG:PMLC_256G_SD	
KM10	639-06575	PCBA,MLB,BEST,MI-8G,TO-256G,X1032	CMN_PARTS_BOM,DEV_PARTS_BOM,ALTERNATE,CPU_AMLY:SREKN,DRAMCFG:MICRON_8GB,NANDCFG:PMLC_256G_TO	
KM1F	639-06576	PCBA,MLB,BEST,SS-8G,SD-256G,X1032	CMN_PARTS_BOM,DEV_PARTS_BOM,ALTERNATE,CPU_AMLY:SREKN,DRAMCFG:SAMSUNG_8GB,NANDCFG:PMLC_256G_SD	Deactivated
KM1R	639-06577	PCBA,MLB,BEST,SS-8G,TO-256G,X1032	CMN_PARTS_BOM,DEV_PARTS_BOM,ALTERNATE,CPU_AMLY:SREKN,DRAMCFG:SAMSUNG_8GB,NANDCFG:PMLC_256G_TO	Deactivated
KM24	639-06578	PCBA,MLB,BEST,HY-16G,SD-256G,X1032	CMN_PARTS_BOM,DEV_PARTS_BOM,ALTERNATE,CPU_AMLY:SREKN,DRAMCFG:HYNIX_16GB,NANDCFG:PMLC_256G_SD	
KM2H	639-06579	PCBA,MLB,BEST,HY-16G,TO-256G,X1032	CMN_PARTS_BOM,DEV_PARTS_BOM,ALTERNATE,CPU_AMLY:SREKN,DRAMCFG:HYNIX_16GB,NANDCFG:PMLC_256G_TO	
KM2V	639-06580	PCBA,MLB,BEST,MI-16G,SD-256G,X1032	CMN_PARTS_BOM,DEV_PARTS_BOM,ALTERNATE,CPU_AMLY:SREKN,DRAMCFG:MICRON_16GB,NANDCFG:PMLC_256G_SD	Deactivated
KM39	639-06581	PCBA,MLB,BEST,MI-16G,TO-256G,X1032	CMN_PARTS_BOM,DEV_PARTS_BOM,ALTERNATE,CPU_AMLY:SREKN,DRAMCFG:MICRON_16GB,NANDCFG:PMLC_256G_TO	Deactivated
KM3Q	639-06582	PCBA,MLB,BEST,SS-16G,SD-256G,X1032	CMN_PARTS_BOM,DEV_PARTS_BOM,ALTERNATE,CPU_AMLY:SREKN,DRAMCFG:SAMSUNG_16GB,NANDCFG:PMLC_256G_SD	Deactivated
KM47	639-06583	PCBA,MLB,BEST,SS-16G,TO-256G,X1032	CMN_PARTS_BOM,DEV_PARTS_BOM,ALTERNATE,CPU_AMLY:SREKN,DRAMCFG:SAMSUNG_16GB,NANDCFG:PMLC_256G_TO	Deactivated
KM4Q	639-06584	PCBA,MLB,BEST,HY-8G,SD-512G,X1032	CMN_PARTS_BOM,DEV_PARTS_BOM,ALTERNATE,CPU_AMLY:SREKN,DRAMCFG:HYNIX_8GB,NANDCFG:PMLC_512G_SD	
KM55	639-06585	PCBA,MLB,BEST,HY-8G,TO-512G,X1032	CMN_PARTS_BOM,DEV_PARTS_BOM,ALTERNATE,CPU_AMLY:SREKN,DRAMCFG:HYNIX_8GB,NANDCFG:PMLC_512G_TO	
KM5J	639-06586	PCBA,MLB,BEST,MI-8G,SD-512G,X1032	CMN_PARTS_BOM,DEV_PARTS_BOM,ALTERNATE,CPU_AMLY:SREKN,DRAMCFG:MICRON_8GB,NANDCFG:PMLC_512G_SD	
KM5W	639-06587	PCBA,MLB,BEST,MI-8G,TO-512G,X1032	CMN_PARTS_BOM,DEV_PARTS_BOM,ALTERNATE,CPU_AMLY:SREKN,DRAMCFG:MICRON_8GB,NANDCFG:PMLC_512G_TO	
KM67	639-06588	PCBA,MLB,BEST,SS-8G,SD-512G,X1032	CMN_PARTS_BOM,DEV_PARTS_BOM,ALTERNATE,CPU_AMLY:SREKN,DRAMCFG:SAMSUNG_8GB,NANDCFG:PMLC_512G_SD	Deactivated
KM6L	639-06589	PCBA,MLB,BEST,SS-8G,TO-512G,X1032	CMN_PARTS_BOM,DEV_PARTS_BOM,ALTERNATE,CPU_AMLY:SREKN,DRAMCFG:SAMSUNG_8GB,NANDCFG:PMLC_512G_TO	Deactivated
KM6Y	639-06590	PCBA,MLB,BEST,HY-16G,SD-512G,X1032	CMN_PARTS_BOM,DEV_PARTS_BOM,ALTERNATE,CPU_AMLY:SREKN,DRAMCFG:HYNIX_16GB,NANDCFG:PMLC_512G_SD	
KM79	639-06591	PCBA,MLB,BEST,HY-16G,TO-512G,X1032	CMN_PARTS_BOM,DEV_PARTS_BOM,ALTERNATE,CPU_AMLY:SREKN,DRAMCFG:HYNIX_16GB,NANDCFG:PMLC_512G_TO	
KM7N	639-06592	PCBA,MLB,BEST,MI-16G,SD-512G,X1032	CMN_PARTS_BOM,DEV_PARTS_BOM,ALTERNATE,CPU_AMLY:SREKN,DRAMCFG:MICRON_16GB,NANDCFG:PMLC_512G_SD	Deactivated
KM81	639-06593	PCBA,MLB,BEST,MI-16G,TO-512G,X1032	CMN_PARTS_BOM,DEV_PARTS_BOM,ALTERNATE,CPU_AMLY:SREKN,DRAMCFG:MICRON_16GB,NANDCFG:PMLC_512G_TO	Deactivated
KM8D	639-06594	PCBA,MLB,BEST,SS-16G,SD-512G,X1032	CMN_PARTS_BOM,DEV_PARTS_BOM,ALTERNATE,CPU_AMLY:SREKN,DRAMCFG:SAMSUNG_16GB,NANDCFG:PMLC_512G_SD	Deactivated
KM8Q	639-06595	PCBA,MLB,BEST,SS-16G,TO-512G,X1032	CMN_PARTS_BOM,DEV_PARTS_BOM,ALTERNATE,CPU_AMLY:SREKN,DRAMCFG:SAMSUNG_16GB,NANDCFG:PMLC_512G_TO	Deactivated
KM93	639-06596	PCBA,MLB,BEST,HY-8G,SS-1.5T,X1032	CMN_PARTS_BOM,DEV_PARTS_BOM,ALTERNATE,CPU_AMLY:SREKN,DRAMCFG:HYNIX_8GB,NANDCFG:3DV4_1P5T_SS	
KM9G	639-06597	PCBA,MLB,BEST,MI-8G,SS-1.5T,X1032	CMN_PARTS_BOM,DEV_PARTS_BOM,ALTERNATE,CPU_AMLY:SREKN,DRAMCFG:MICRON_8GB,NANDCFG:3DV4_1P5T_SS	
KM9T	639-06598	PCBA,MLB,BEST,SS-8G,SS-1.5T,X1032	CMN_PARTS_BOM,DEV_PARTS_BOM,ALTERNATE,CPU_AMLY:SREKN,DRAMCFG:SAMSUNG_8GB,NANDCFG:3DV4_1P5T_SS	Deactivated
KMC5	639-06599	PCBA,MLB,BEST,HY-16G,SS-1.5T,X1032	CMN_PARTS_BOM,DEV_PARTS_BOM,ALTERNATE,CPU_AMLY:SREKN,DRAMCFG:HYNIX_16GB,NANDCFG:3DV4_1P5T_SS	
KMCJ	639-06600	PCBA,MLB,BEST,MI-16G,SS-1.5T,X1032	CMN_PARTS_BOM,DEV_PARTS_BOM,ALTERNATE,CPU_AMLY:SREKN,DRAMCFG:MICRON_16GB,NANDCFG:3DV4_1P5T_SS	Deactivated
KMCW	639-06601	PCBA,MLB,BEST,SS-16G,SS-1.5T,X1032	CMN_PARTS_BOM,DEV_PARTS_BOM,ALTERNATE,CPU_AMLY:SREKN,DRAMCFG:SAMSUNG_16GB,NANDCFG:3DV4_1P5T_SS	Deactivated

EEEE	BOM NUMBER	BOM NAME	BOM OPTIONS	
KMD7	639-06602	PCBA,MLB,BTTR,HY-8G,SD-128G,X1032	CMN_PARTS_BOM,DEV_PARTS_BOM,ALTERNATE,CPU_AMLY:SREKP,DRAMCFG:HYNIX_8GB,NANDCFG:PMLC_128G_SD	
KMDL	639-06603	PCBA,MLB,BTTR,HY-8G,TO-128G,X1032	CMN_PARTS_BOM,DEV_PARTS_BOM,ALTERNATE,CPU_AMLY:SREKP,DRAMCFG:HYNIX_8GB,NANDCFG:PMLC_128G_TO	
KMDY	639-06604	PCBA,MLB,BTTR,MI-8G,SD-128G,X1032	CMN_PARTS_BOM,DEV_PARTS_BOM,ALTERNATE,CPU_AMLY:SREKP,DRAMCFG:MICRON_8GB,NANDCFG:PMLC_128G_SD	
KMF9	639-06605	PCBA,MLB,BTTR,MI-8G,TO-128G,X1032	CMN_PARTS_BOM,DEV_PARTS_BOM,ALTERNATE,CPU_AMLY:SREKP,DRAMCFG:MICRON_8GB,NANDCFG:PMLC_128G_TO	
KMFN	639-06606	PCBA,MLB,BTTR,SS-8G,SD-128G,X1032	CMN_PARTS_BOM,DEV_PARTS_BOM,ALTERNATE,CPU_AMLY:SREKP,DRAMCFG:SAMSUNG_8GB,NANDCFG:PMLC_128G_SD	Deactivated
KMG1	639-06607	PCBA,MLB,BTTR,SS-8G,TO-128G,X1032	CMN_PARTS_BOM,DEV_PARTS_BOM,ALTERNATE,CPU_AMLY:SREKP,DRAMCFG:SAMSUNG_8GB,NANDCFG:PMLC_128G_TO	Deactivated
KMGD	639-06608	PCBA,MLB,BTTR,HY-16G,SD-128G,X1032	CMN_PARTS_BOM,DEV_PARTS_BOM,ALTERNATE,CPU_AMLY:SREKP,DRAMCFG:HYNIX_16GB,NANDCFG:PMLC_128G_SD	
KMGQ	639-06609	PCBA,MLB,BTTR,HY-16G,TO-128G,X1032	CMN_PARTS_BOM,DEV_PARTS_BOM,ALTERNATE,CPU_AMLY:SREKP,DRAMCFG:HYNIX_16GB,NANDCFG:PMLC_128G_TO	
KMH3	639-06610	PCBA,MLB,BTTR,MI-16G,SD-128G,X1032	CMN_PARTS_BOM,DEV_PARTS_BOM,ALTERNATE,CPU_AMLY:SREKP,DRAMCFG:MICRON_16GB,NANDCFG:PMLC_128G_SD	Deactivated
KMHG	639-06611	PCBA,MLB,BTTR,MI-16G,TO-128G,X1032	CMN_PARTS_BOM,DEV_PARTS_BOM,ALTERNATE,CPU_AMLY:SREKP,DRAMCFG:MICRON_16GB,NANDCFG:PMLC_128G_TO	Deactivated
KMHT	639-06612	PCBA,MLB,BTTR,SS-16G,SD-128G,X1032	CMN_PARTS_BOM,DEV_PARTS_BOM,ALTERNATE,CPU_AMLY:SREKP,DRAMCFG:SAMSUNG_16GB,NANDCFG:PMLC_128G_SD	Deactivated
KMJ5	639-06613	PCBA,MLB,BTTR,SS-16G,TO-128G,X1032	CMN_PARTS_BOM,DEV_PARTS_BOM,ALTERNATE,CPU_AMLY:SREKP,DRAMCFG:SAMSUNG_16GB,NANDCFG:PMLC_128G_TO	Deactivated
KMJK	639-06614	PCBA,MLB,BTTR,HY-8G,SD-256G,X1032	CMN_PARTS_BOM,DEV_PARTS_BOM,ALTERNATE,CPU_AMLY:SREKP,DRAMCFG:HYNIX_8GB,NANDCFG:PMLC_256G_SD	
KMJX	639-06615	PCBA,MLB,BTTR,HY-8G,TO-256G,X1032	CMN_PARTS_BOM,DEV_PARTS_BOM,ALTERNATE,CPU_AMLY:SREKP,DRAMCFG:HYNIX_8GB,NANDCFG:PMLC_256G_TO	
KMK8	639-06616	PCBA,MLB,BTTR,MI-8G,SD-256G,X1032	CMN_PARTS_BOM,DEV_PARTS_BOM,ALTERNATE,CPU_AMLY:SREKP,DRAMCFG:MICRON_8GB,NANDCFG:PMLC_256G_SD	
KMKM	639-06617	PCBA,MLB,BTTR,MI-8G,TO-256G,X1032	CMN_PARTS_BOM,DEV_PARTS_BOM,ALTERNATE,CPU_AMLY:SREKP,DRAMCFG:MICRON_8GB,NANDCFG:PMLC_256G_TO	
KML0	639-06618	PCBA,MLB,BTTR,SS-8G,SD-256G,X1032	CMN_PARTS_BOM,DEV_PARTS_BOM,ALTERNATE,CPU_AMLY:SREKP,DRAMCFG:SAMSUNG_8GB,NANDCFG:PMLC_256G_SD	Deactivated
KMLC	639-06619	PCBA,MLB,BTTR,SS-8G,TO-256G,X1032	CMN_PARTS_BOM,DEV_PARTS_BOM,ALTERNATE,CPU_AMLY:SREKP,DRAMCFG:SAMSUNG_8GB,NANDCFG:PMLC_256G_TO	Deactivated
KMLP	639-06620	PCBA,MLB,BTTR,HY-16G,SD-256G,X1032	CMN_PARTS_BOM,DEV_PARTS_BOM,ALTERNATE,CPU_AMLY:SREKP,DRAMCFG:HYNIX_16GB,NANDCFG:PMLC_256G_SD	
KMM2	639-06621	PCBA,MLB,BTTR,HY-16G,TO-256G,X1032	CMN_PARTS_BOM,DEV_PARTS_BOM,ALTERNATE,CPU_AMLY:SREKP,DRAMCFG:HYNIX_16GB,NANDCFG:PMLC_256G_TO	
KMMF	639-06622	PCBA,MLB,BTTR,MI-16G,SD-256G,X1032	CMN_PARTS_BOM,DEV_PARTS_BOM,ALTERNATE,CPU_AMLY:SREKP,DRAMCFG:MICRON_16GB,NANDCFG:PMLC_256G_SD	Deactivated
KMMR	639-06623	PCBA,MLB,BTTR,MI-16G,TO-256G,X1032	CMN_PARTS_BOM,DEV_PARTS_BOM,ALTERNATE,CPU_AMLY:SREKP,DRAMCFG:MICRON_16GB,NANDCFG:PMLC_256G_TO	Deactivated
KMN4	639-06624	PCBA,MLB,BTTR,SS-16G,SD-256G,X1032	CMN_PARTS_BOM,DEV_PARTS_BOM,ALTERNATE,CPU_AMLY:SREKP,DRAMCFG:SAMSUNG_16GB,NANDCFG:PMLC_256G_SD	Deactivated
KMNH	639-06625	PCBA,MLB,BTTR,SS-16G,TO-256G,X1032	CMN_PARTS_BOM,DEV_PARTS_BOM,ALTERNATE,CPU_AMLY:SREKP,DRAMCFG:SAMSUNG_16GB,NANDCFG:PMLC_256G_TO	Deactivated
KMNV	639-06626	PCBA,MLB,BTTR,HY-8G,SD-512G,X1032	CMN_PARTS_BOM,DEV_PARTS_BOM,ALTERNATE,CPU_AMLY:SREKP,DRAMCFG:HYNIX_8GB,NANDCFG:PMLC_512G_SD	
KMP6	639-06627	PCBA,MLB,BTTR,HY-8G,TO-512G,X1032	CMN_PARTS_BOM,DEV_PARTS_BOM,ALTERNATE,CPU_AMLY:SREKP,DRAMCFG:HYNIX_8GB,NANDCFG:PMLC_512G_TO	
KMPK	639-06628	PCBA,MLB,BTTR,MI-8G,SD-512G,X1032	CMN_PARTS_BOM,DEV_PARTS_BOM,ALTERNATE,CPU_AMLY:SREKP,DRAMCFG:MICRON_8GB,NANDCFG:PMLC_512G_SD	
KMPX	639-06629	PCBA,MLB,BTTR,MI-8G,TO-512G,X1032	CMN_PARTS_BOM,DEV_PARTS_BOM,ALTERNATE,CPU_AMLY:SREKP,DRAMCFG:MICRON_8GB,NANDCFG:PMLC_512G_TO	
KMQ8	639-06630	PCBA,MLB,BTTR,SS-8G,SD-512G,X1032	CMN_PARTS_BOM,DEV_PARTS_BOM,ALTERNATE,CPU_AMLY:SREKP,DRAMCFG:SAMSUNG_8GB,NANDCFG:PMLC_512G_SD	Deactivated
KMQM	639-06631	PCBA,MLB,BTTR,SS-8G,TO-512G,X1032	CMN_PARTS_BOM,DEV_PARTS_BOM,ALTERNATE,CPU_AMLY:SREKP,DRAMCFG:SAMSUNG_8GB,NANDCFG:PMLC_512G_TO	Deactivated
KMR0	639-06632	PCBA,MLB,BTTR,HY-16G,SD-512G,X1032	CMN_PARTS_BOM,DEV_PARTS_BOM,ALTERNATE,CPU_AMLY:SREKP,DRAMCFG:HYNIX_16GB,NANDCFG:PMLC_512G_SD	
KMRC	639-06633	PCBA,MLB,BTTR,HY-16G,TO-512G,X1032	CMN_PARTS_BOM,DEV_PARTS_BOM,ALTERNATE,CPU_AMLY:SREKP,DRAMCFG:HYNIX_16GB,NANDCFG:PMLC_512G_TO	
KMRP	639-06634	PCBA,MLB,BTTR,MI-16G,SD-512G,X1032	CMN_PARTS_BOM,DEV_PARTS_BOM,ALTERNATE,CPU_AMLY:SREKP,DRAMCFG:MICRON_16GB,NANDCFG:PMLC_512G_SD	Deactivated
KMT2	639-06635	PCBA,MLB,BTTR,MI-16G,TO-512G,X1032	CMN_PARTS_BOM,DEV_PARTS_BOM,ALTERNATE,CPU_AMLY:SREKP,DRAMCFG:MICRON_16GB,NANDCFG:PMLC_512G_TO	Deactivated
KMTF	639-06636	PCBA,MLB,BTTR,SS-16G,SD-512G,X1032	CMN_PARTS_BOM,DEV_PARTS_BOM,ALTERNATE,CPU_AMLY:SREKP,DRAMCFG:SAMSUNG_16GB,NANDCFG:PMLC_512G_SD	Deactivated
KMTR	639-06637	PCBA,MLB,BTTR,SS-16G,TO-512G,X1032	CMN_PARTS_BOM,DEV_PARTS_BOM,ALTERNATE,CPU_AMLY:SREKP,DRAMCFG:SAMSUNG_16GB,NANDCFG:PMLC_512G_TO	Deactivated
KMV4	639-06638	PCBA,MLB,BTTR,HY-8G,SS-1.5T,X1032	CMN_PARTS_BOM,DEV_PARTS_BOM,ALTERNATE,CPU_AMLY:SREKP,DRAMCFG:HYNIX_8GB,NANDCFG:3DV4_1P5T_SS	
KMVL	639-06639	PCBA,MLB,BTTR,MI-8G,SS-1.5T,X1032	CMN_PARTS_BOM,DEV_PARTS_BOM,ALTERNATE,CPU_AMLY:SREKP,DRAMCFG:MICRON_8GB,NANDCFG:3DV4_1P5T_SS	
KMVY	639-06640	PCBA,MLB,BTTR,SS-8G,SS-1.5T,X1032	CMN_PARTS_BOM,DEV_PARTS_BOM,ALTERNATE,CPU_AMLY:SREKP,DRAMCFG:SAMSUNG_8GB,NANDCFG:3DV4_1P5T_SS	Deactivated
KMW9	639-06641	PCBA,MLB,BTTR,HY-16G,SS-1.5T,X1032	CMN_PARTS_BOM,DEV_PARTS_BOM,ALTERNATE,CPU_AMLY:SREKP,DRAMCFG:HYNIX_16GB,NANDCFG:3DV4_1P5T_SS	
KMWN	639-06642	PCBA,MLB,BTTR,MI-16G,SS-1.5T,X1032	CMN_PARTS_BOM,DEV_PARTS_BOM,ALTERNATE,CPU_AMLY:SREKP,DRAMCFG:MICRON_16GB,NANDCFG:3DV4_1P5T_SS	Deactivated
KMX1	639-06643	PCBA,MLB,BTTR,SS-16G,SS-1.5T,X1032	CMN_PARTS_BOM,DEV_PARTS_BOM,ALTERNATE,CPU_AMLY:SREKP,DRAMCFG:SAMSUNG_16GB,NANDCFG:3DV4_1P5T_SS	Deactivated

苹果最新图纸

PAGE TITLE
BOM Variants 1

Apple Inc.

DRAWING NUMBER 051-04039 SIZE D
REVISION 2.0.0
BRANCH
PAGE 141 OF 145
SHEET 83 OF 85

NOTICE OF PROPRIETARY PROPERTY:
THE INFORMATION CONTAINED HEREIN IS THE PROPRIETARY PROPERTY OF APPLE INC.
THE POSESSOR AGREES TO THE FOLLOWING:
I TO MAINTAIN THIS DOCUMENT IN CONFIDENCE
II NOT TO REPRODUCE OR COPY IT
III NOT TO REVEAL OR PUBLISH IT IN WHOLE OR PART
IV ALL RIGHTS RESERVED

BOM Variants

EEEE	BOM NUMBER	BOM NAME	BOM OPTIONS	
KMXD	639-06644	PCBA,MLB,GOOD,HY-8G,SD-128G,X1032	CNS_PARTS_BOM,DEV_PARTS_BOM,ALTERNATE,CPU_AMLY:SREKQ,DRAMCFG:HYNIX_8GB,NANDCFG:PMLC_128G_SD	
KMXQ	639-06645	PCBA,MLB,GOOD,HY-8G,TO-128G,X1032	CNS_PARTS_BOM,DEV_PARTS_BOM,ALTERNATE,CPU_AMLY:SREKQ,DRAMCFG:HYNIX_8GB,NANDCFG:PMLC_128G_TO	
KMY4	639-06646	PCBA,MLB,GOOD,MI-8G,SD-128G,X1032	CNS_PARTS_BOM,DEV_PARTS_BOM,ALTERNATE,CPU_AMLY:SREKQ,DRAMCFG:MICRON_8GB,NANDCFG:PMLC_128G_SD	
KMYH	639-06647	PCBA,MLB,GOOD,MI-8G,TO-128G,X1032	CNS_PARTS_BOM,DEV_PARTS_BOM,ALTERNATE,CPU_AMLY:SREKQ,DRAMCFG:MICRON_8GB,NANDCFG:PMLC_128G_TO	
KMYV	639-06648	PCBA,MLB,GOOD,SS-8G,SD-128G,X1032	CNS_PARTS_BOM,DEV_PARTS_BOM,ALTERNATE,CPU_AMLY:SREKQ,DRAMCFG:SAMSUNG_8GB,NANDCFG:PMLC_128G_SD	Deactivated
KN06	639-06649	PCBA,MLB,GOOD,SS-8G,TO-128G,X1032	CNS_PARTS_BOM,DEV_PARTS_BOM,ALTERNATE,CPU_AMLY:SREKQ,DRAMCFG:SAMSUNG_8GB,NANDCFG:PMLC_128G_TO	Deactivated
KN0L	639-06650	PCBA,MLB,GOOD,HY-16G,SD-128G,X1032	CNS_PARTS_BOM,DEV_PARTS_BOM,ALTERNATE,CPU_AMLY:SREKQ,DRAMCFG:HYNIX_16GB,NANDCFG:PMLC_128G_SD	
KN0Y	639-06651	PCBA,MLB,GOOD,HY-16G,TO-128G,X1032	CNS_PARTS_BOM,DEV_PARTS_BOM,ALTERNATE,CPU_AMLY:SREKQ,DRAMCFG:HYNIX_16GB,NANDCFG:PMLC_128G_TO	
KN19	639-06652	PCBA,MLB,GOOD,MI-16G,SD-128G,X1032	CNS_PARTS_BOM,DEV_PARTS_BOM,ALTERNATE,CPU_AMLY:SREKQ,DRAMCFG:MICRON_16GB,NANDCFG:PMLC_128G_SD	Deactivated
KN1N	639-06653	PCBA,MLB,GOOD,MI-16G,TO-128G,X1032	CNS_PARTS_BOM,DEV_PARTS_BOM,ALTERNATE,CPU_AMLY:SREKQ,DRAMCFG:MICRON_16GB,NANDCFG:PMLC_128G_TO	Deactivated
KN22	639-06654	PCBA,MLB,GOOD,SS-16G,SD-128G,X1032	CNS_PARTS_BOM,DEV_PARTS_BOM,ALTERNATE,CPU_AMLY:SREKQ,DRAMCFG:SAMSUNG_16GB,NANDCFG:PMLC_128G_SD	Deactivated
KN2F	639-06655	PCBA,MLB,GOOD,SS-16G,TO-128G,X1032	CNS_PARTS_BOM,DEV_PARTS_BOM,ALTERNATE,CPU_AMLY:SREKQ,DRAMCFG:SAMSUNG_16GB,NANDCFG:PMLC_128G_TO	Deactivated
KN2R	639-06656	PCBA,MLB,GOOD,HY-8G,SD-256G,X1032	CNS_PARTS_BOM,DEV_PARTS_BOM,ALTERNATE,CPU_AMLY:SREKQ,DRAMCFG:HYNIX_8GB,NANDCFG:PMLC_256G_SD	
KN34	639-06657	PCBA,MLB,GOOD,HY-8G,TO-256G,X1032	CNS_PARTS_BOM,DEV_PARTS_BOM,ALTERNATE,CPU_AMLY:SREKQ,DRAMCFG:HYNIX_8GB,NANDCFG:PMLC_256G_TO	
KN3J	639-06658	PCBA,MLB,GOOD,MI-8G,SD-256G,X1032	CNS_PARTS_BOM,DEV_PARTS_BOM,ALTERNATE,CPU_AMLY:SREKQ,DRAMCFG:MICRON_8GB,NANDCFG:PMLC_256G_SD	
KN3Y	639-06659	PCBA,MLB,GOOD,MI-8G,TO-256G,X1032	CNS_PARTS_BOM,DEV_PARTS_BOM,ALTERNATE,CPU_AMLY:SREKQ,DRAMCFG:MICRON_8GB,NANDCFG:PMLC_256G_TO	
KN4F	639-06660	PCBA,MLB,GOOD,SS-8G,SD-256G,X1032	CNS_PARTS_BOM,DEV_PARTS_BOM,ALTERNATE,CPU_AMLY:SREKQ,DRAMCFG:SAMSUNG_8GB,NANDCFG:PMLC_256G_SD	Deactivated
KN4X	639-06661	PCBA,MLB,GOOD,SS-8G,TO-256G,X1032	CNS_PARTS_BOM,DEV_PARTS_BOM,ALTERNATE,CPU_AMLY:SREKQ,DRAMCFG:SAMSUNG_8GB,NANDCFG:PMLC_256G_TO	Deactivated
KN5C	639-06662	PCBA,MLB,GOOD,HY-16G,SD-256G,X1032	CNS_PARTS_BOM,DEV_PARTS_BOM,ALTERNATE,CPU_AMLY:SREKQ,DRAMCFG:HYNIX_16GB,NANDCFG:PMLC_256G_SD	
KN5P	639-06663	PCBA,MLB,GOOD,HY-16G,TO-256G,X1032	CNS_PARTS_BOM,DEV_PARTS_BOM,ALTERNATE,CPU_AMLY:SREKQ,DRAMCFG:HYNIX_16GB,NANDCFG:PMLC_256G_TO	
KN62	639-06664	PCBA,MLB,GOOD,MI-16G,SD-256G,X1032	CNS_PARTS_BOM,DEV_PARTS_BOM,ALTERNATE,CPU_AMLY:SREKQ,DRAMCFG:MICRON_16GB,NANDCFG:PMLC_256G_SD	Deactivated
KN6F	639-06665	PCBA,MLB,GOOD,MI-16G,TO-256G,X1032	CNS_PARTS_BOM,DEV_PARTS_BOM,ALTERNATE,CPU_AMLY:SREKQ,DRAMCFG:MICRON_16GB,NANDCFG:PMLC_256G_TO	Deactivated
KN6R	639-06666	PCBA,MLB,GOOD,SS-16G,SD-256G,X1032	CNS_PARTS_BOM,DEV_PARTS_BOM,ALTERNATE,CPU_AMLY:SREKQ,DRAMCFG:SAMSUNG_16GB,NANDCFG:PMLC_256G_SD	Deactivated
KN74	639-06667	PCBA,MLB,GOOD,SS-16G,TO-256G,X1032	CNS_PARTS_BOM,DEV_PARTS_BOM,ALTERNATE,CPU_AMLY:SREKQ,DRAMCFG:SAMSUNG_16GB,NANDCFG:PMLC_256G_TO	Deactivated
KN7H	639-06668	PCBA,MLB,GOOD,HY-8G,SD-512G,X1032	CNS_PARTS_BOM,DEV_PARTS_BOM,ALTERNATE,CPU_AMLY:SREKQ,DRAMCFG:HYNIX_8GB,NANDCFG:PMLC_512G_SD	
KN7V	639-06669	PCBA,MLB,GOOD,HY-8G,TO-512G,X1032	CNS_PARTS_BOM,DEV_PARTS_BOM,ALTERNATE,CPU_AMLY:SREKQ,DRAMCFG:HYNIX_8GB,NANDCFG:PMLC_512G_TO	
KN86	639-06670	PCBA,MLB,GOOD,MI-8G,SD-512G,X1032	CNS_PARTS_BOM,DEV_PARTS_BOM,ALTERNATE,CPU_AMLY:SREKQ,DRAMCFG:MICRON_8GB,NANDCFG:PMLC_512G_SD	
KN8M	639-06671	PCBA,MLB,GOOD,MI-8G,TO-512G,X1032	CNS_PARTS_BOM,DEV_PARTS_BOM,ALTERNATE,CPU_AMLY:SREKQ,DRAMCFG:MICRON_8GB,NANDCFG:PMLC_512G_TO	
KN90	639-06672	PCBA,MLB,GOOD,SS-8G,SD-512G,X1032	CNS_PARTS_BOM,DEV_PARTS_BOM,ALTERNATE,CPU_AMLY:SREKQ,DRAMCFG:SAMSUNG_8GB,NANDCFG:PMLC_512G_SD	Deactivated
KN9C	639-06673	PCBA,MLB,GOOD,SS-8G,TO-512G,X1032	CNS_PARTS_BOM,DEV_PARTS_BOM,ALTERNATE,CPU_AMLY:SREKQ,DRAMCFG:SAMSUNG_8GB,NANDCFG:PMLC_512G_TO	Deactivated
KN9P	639-06674	PCBA,MLB,GOOD,HY-16G,SD-512G,X1032	CNS_PARTS_BOM,DEV_PARTS_BOM,ALTERNATE,CPU_AMLY:SREKQ,DRAMCFG:HYNIX_16GB,NANDCFG:PMLC_512G_SD	
KNC2	639-06675	PCBA,MLB,GOOD,HY-16G,TO-512G,X1032	CNS_PARTS_BOM,DEV_PARTS_BOM,ALTERNATE,CPU_AMLY:SREKQ,DRAMCFG:HYNIX_16GB,NANDCFG:PMLC_512G_TO	
KNCF	639-06676	PCBA,MLB,GOOD,MI-16G,SD-512G,X1032	CNS_PARTS_BOM,DEV_PARTS_BOM,ALTERNATE,CPU_AMLY:SREKQ,DRAMCFG:MICRON_16GB,NANDCFG:PMLC_512G_SD	Deactivated
KNCR	639-06677	PCBA,MLB,GOOD,MI-16G,TO-512G,X1032	CNS_PARTS_BOM,DEV_PARTS_BOM,ALTERNATE,CPU_AMLY:SREKQ,DRAMCFG:MICRON_16GB,NANDCFG:PMLC_512G_TO	Deactivated
KND4	639-06678	PCBA,MLB,GOOD,SS-16G,SD-512G,X1032	CNS_PARTS_BOM,DEV_PARTS_BOM,ALTERNATE,CPU_AMLY:SREKQ,DRAMCFG:SAMSUNG_16GB,NANDCFG:PMLC_512G_SD	Deactivated
KNDJ	639-06679	PCBA,MLB,GOOD,SS-16G,TO-512G,X1032	CNS_PARTS_BOM,DEV_PARTS_BOM,ALTERNATE,CPU_AMLY:SREKQ,DRAMCFG:SAMSUNG_16GB,NANDCFG:PMLC_512G_TO	Deactivated
KNDX	639-06680	PCBA,MLB,GOOD,HY-8G,SS-1.5T,X1032	CNS_PARTS_BOM,DEV_PARTS_BOM,ALTERNATE,CPU_AMLY:SREKQ,DRAMCFG:HYNIX_8GB,NANDCFG:3DV4_1P5T_SS	
KNF8	639-06681	PCBA,MLB,GOOD,MI-8G,SS-1.5T,X1032	CNS_PARTS_BOM,DEV_PARTS_BOM,ALTERNATE,CPU_AMLY:SREKQ,DRAMCFG:MICRON_8GB,NANDCFG:3DV4_1P5T_SS	
KNFM	639-06682	PCBA,MLB,GOOD,SS-8G,SS-1.5T,X1032	CNS_PARTS_BOM,DEV_PARTS_BOM,ALTERNATE,CPU_AMLY:SREKQ,DRAMCFG:SAMSUNG_8GB,NANDCFG:3DV4_1P5T_SS	Deactivated
KNG0	639-06683	PCBA,MLB,GOOD,HY-16G,SS-1.5T,X1032	CNS_PARTS_BOM,DEV_PARTS_BOM,ALTERNATE,CPU_AMLY:SREKQ,DRAMCFG:HYNIX_16GB,NANDCFG:3DV4_1P5T_SS	
KNGC	639-06684	PCBA,MLB,GOOD,MI-16G,SS-1.5T,X1032	CNS_PARTS_BOM,DEV_PARTS_BOM,ALTERNATE,CPU_AMLY:SREKQ,DRAMCFG:MICRON_16GB,NANDCFG:3DV4_1P5T_SS	Deactivated
KNGP	639-06685	PCBA,MLB,GOOD,SS-16G,SS-1.5T,X1032	CNS_PARTS_BOM,DEV_PARTS_BOM,ALTERNATE,CPU_AMLY:SREKQ,DRAMCFG:SAMSUNG_16GB,NANDCFG:3DV4_1P5T_SS	Deactivated

苹果最新图纸

PAGE TITLE
BOM Variants 2

Apple Inc.

DRAWING NUMBER 051-04039 SIZE D
REVISION 2.0.0
BRANCH
PAGE 142 OF 145
SHEET 84 OF 85

NOTICE OF PROPRIETARY PROPERTY:
THE INFORMATION CONTAINED HEREIN IS THE PROPRIETARY PROPERTY OF APPLE INC.
THE POSESSOR AGREES TO THE FOLLOWING:
I TO MAINTAIN THIS DOCUMENT IN CONFIDENCE
II NOT TO REPRODUCE OR COPY IT
III NOT TO REVEAL OR PUBLISH IT IN WHOLE OR PART
IV ALL RIGHTS RESERVED

Alternates

PART NUMBER	ALTERNATE FOR PART NUMBER	BOM OPTION	REF DES	COMMENTS:	Alternate Vendor	Primary Vendor
107S00033	107S00034		ALL	rdar://problem/31026333	TFT	Cyntec
107S00076	107S00044		ALL	rdar://problem/31026474	Yageo	Cyntec
107S00070	107S0085		ALL	rdar://problem/31026832	TDK	Murata
107S00139	107S0178		ALL	rdar://problem/31026896	Panasonic	Murata
107S0248	107S0250		ALL	rdar://problem/31026938	TFT	Cyntec
128S00087	128S00011		ALL	rdar://problem/31104542	Panasonic	Kemet
128S00026	128S00011		ALL	rdar://problem/31104542	NEC	Kemet
128S00031	128S00011		ALL	rdar://problem/31104542	Rohm	Kemet
197S00120	197S00118		ALL	rdar://problem/32474316	Epson	TXC
152S00368	152S00269		ALL	rdar://problem/32986667	NEC	Cyntec
152S00708	152S00265		ALL	rdar://problem/32986857	Chilisin	Cyntec
152S00786	152S00344		ALL	rdar://problem/32988704	Cyntec	Murata
152S00785	152S00477		ALL	rdar://problem/32988930	Chilisin	Murata
152S00182	152S00703		ALL	rdar://problem/32989310	Cyntec	Chilisin
128S0264	128S00081		ALL	rdar://problem/32981497	Panasonic	Panasonic
128S0364	128S00081		ALL	rdar://problem/32981497	Kemet	Panasonic
128S00069	128S00067		ALL	rdar://problem/31160233	Rohm	Panasonic
128S00062	128S00067		ALL	rdar://problem/31160233	NEC	Panasonic
128S00065	128S00067		ALL	rdar://problem/31160233	Kemet	Panasonic
128S00039	128S00038		ALL	rdar://problem/32984088	NEC	Kemet
128S0302	128S00038		ALL	rdar://problem/32984088	Panasonic	Kemet
128S0631	128S0352		ALL	rdar://problem/32984967	NEC	Panasonic
152S00807	152S00837		ALL	rdar://problem/33018005	Cyntec	NEC
152S00734	152S00730		ALL	rdar://problem/32986265	Chilisin	Cyntec
376S00303	376S00012		ALL	Per Peter H	Diodes	TI
107S00015	107S00011		ALL	rdar://problem/33006397	TFT	Cyntec
107S00029	107S00087		ALL	rdar://problem/33006830	TFT	Yageo
376S00302	376S1038		ALL	rdar://problem/33008171	Diodes	TI
376S00227	376S00203		ALL	rdar://problem/32990227	Fairchild	Vishay
376S00204	376S00203		ALL	rdar://problem/32990227	Diodes	Vishay
376S00226	376S00203		ALL	rdar://problem/32990227	Vishay	Vishay
152S00800	152S00268		ALL	rdar://problem/32986455	NEC	Cyntec
128S0445	128S0436		ALL	rdar://problem/32981936	Panasonic	Kemet
128S0392	128S0436		ALL	rdar://problem/32981936	Panasonic	Panasonic
128S00042	128S0311		ALL	rdar://problem/32982452	Kemet	NEC
128S00043	128S0311		ALL	rdar://problem/32982452	Panasonic	NEC
128S0329	128S0311		ALL	rdar://problem/32982452	Panasonic	NEC
128S00058	128S00018		ALL	rdar://problem/32983704	Rohm	NEC
376S00007	376S1179		ALL	rdar://problem/33006121	AOS	Vishay
376S00228	376S1179		ALL	rdar://problem/33006121	Fairchild	Vishay
138S00047	138S00073		ALL	rdar://problem/31227780	Taiyo	Murata
138S00084	138S00060		ALL	rdar://problem/31227858	Taiyo	Murata
138S0703	138S0648		ALL	rdar://problem/31228419	Murata	Taiyo
353S00497	353S00796		ALL	rdar://problem/31285876	Vishay	Fairchild
197S00047	197S00036		ALL	rdar://problem/31509365	Kyocera	TXC
197S00048	197S00036		ALL	rdar://problem/31509365	Murata	TXC
197S00046	197S00036		ALL	rdar://problem/31509365	Epson	TXC
311S00060	311S0273		ALL	rdar://problem/31512477	Diodes	Philips
138S1101	138S0738		ALL	rdar://problem/31491081	Murata	Samsung
371S00180	371S00077		ALL	rdar://problem/31927114	Diodes	NXP
138S00049	138S0831		ALL	rdar://problem/31284882	Kyocera	Murata
138S00086	138S0884		ALL	rdar://problem/31285557	Taiyo	Murata

PART NUMBER	ALTERNATE FOR PART NUMBER	BOM OPTION	REF DES	COMMENTS:	Alternate Vendor	Primary Vendor
138S00077	138S00035		ALL	rdar://problem/31167038	Taiyo	Murata
138S00093	138S00035		ALL	rdar://problem/31167038	Kyocera	Murata
132S00012	132S0401		ALL	rdar://problem/31180314	Murata/TDK	Taiyo
138S00015	138S0777		ALL	rdar://problem/31254330	Samsung/Taiyo	Murata
138S0786	138S0847		ALL	rdar://problem/31253709	Samsung	Murata/Taiyo
152S00398	152S00204		ALL	rdar://problem/33011314	Taiyo	Cyntec
152S00724	152S00311		ALL	rdar://problem/33011211	Chilisin	Cyntec
152S00726	152S00592		ALL	rdar://problem/33011437	Chilisin	Cyntec
152S00725	152S00590		ALL	rdar://problem/33011526	Chilisin	Cyntec
371S00089	371S00085		ALL	rdar://problem/31927389	Diodes	ON Semi
155S00190	155S0914		ALL	rdar://problem/32364855	Taiyo	Panasonic
155S00007	155S0667		ALL	rdar://problem/32415629	Taiyo	Panasonic
155S00203	155S0894		ALL	rdar://problem/32435328	Taiyo	Murata
376S00219	376S00079		ALL	rdar://problem/32435733	TI	Fairchild
311S00013	311S0508		ALL	rdar://problem/32476985	Diodes	NXP/Nexperia
740S00033	740S00002		ALL	rdar://problem/32477535	Thinking	Murata
740S0118	740S00028		ALL	rdar://problem/32477706	Polytronics	Bussman
138S00024	138S0986		ALL	rdar://problem/31410587	Taiyo/TDK	Murata
155S00067	155S00401		ALL	Per CE	TDK	Murata
155S0741	155S0361		ALL	rdar://problem/32406745	Murata	TDK
155S00166	155S0391		ALL	rdar://problem/32407296	TDK	Murata
311S00121	311S0398		ALL	rdar://problem/32474809	Diodes	NXP/Nexperia
371S00127	371S00182		ALL	rdar://problem/36311626	Nexperia	Diodes
138S00056	138S1100		ALL	rdar://problem/31411109	Taiyo/TDK	Murata
311S00104	311S00091		ALL	rdar://problem/31509861	TI	ON Semi
353S01041	353S01042		ALL	rdar://problem/31816775	ST	TI
311S00156	311S00129		ALL	rdar://problem/31941459	Nexperia	TI
107S00056	107S00086		ALL	rdar://problem/39511087	Cyntec	TFT
138S0775	138S0860		ALL	Per Peter Hazucha	Samsung	Murata
138S0846	138S0811		ALL	rdar://problem/30812097	Samsung	Murata
376S1053	376S0604		ALL	rdar://problem/30812097	Diodes	Fairchild
152S00359	152S00253		ALL	rdar://problem/30812097	Chilisin	Cyntec
740S00041	740S0159		ALL	rdar://problem/30812097	Bourns	Littlefuse
376S1106	376S0678		ALL	rdar://problem/30812097	Fairchild	Vishay
371S00074	371S0602		ALL	rdar://problem/33675478	Infineon	NXP
132S00176	132S0640		ALL	rdar://problem/33924830	Yageo	Murata
311S0426	311S00007		ALL		NXP	Diodes
138S0739	138S0706		ALL	rdar://problem/31253813	Samsung	Murata
138S0945	138S0706		ALL	rdar://problem/31253813	Kyocera	Murata
155S0665	155S00232		ALL	rdar://problem/32364084	Murata	TDK
311S00138	311S0436		ALL	rdar://problem/32474939	Nexperia	TI
335S00270	335S00203		ALL	rdar://problem/33516617	Adesto	Macronix
311S00175	311S00029		ALL	rdar://problem/33857884	Nexperia	Diodes
335S00213	335S0888		ALL	rdar://problem/33927828	On Semi	STMicro
378S00029	378S00002		ALL	rdar://problem/33932183	Lite-On	Everlight
197S00053	197S00050		ALL	rdar://problem/33931383	Kyocera	TXC
197S00054	197S00050		ALL	rdar://problem/33931383	NDK	TXC
197S00055	197S00050		ALL	rdar://problem/33931383	Murata	TXC
311S00178	311S00177		ALL	rdar://problem/39513462	On Semi	TI
138S0754	138S0942		ALL	Per Peter H	Samsung	Murata
132S0238	132S00181		ALL	rdar://problem/34016553	Murata	Yageo

PART NUMBER	ALTERNATE FOR PART NUMBER	BOM OPTION	REF DES	COMMENTS:	Alternate Vendor	Primary Vendor
138S00073	138S0942		ALL	rdar://problem/34812612	Murata	Murata
138S00047	138S0942		ALL	rdar://problem/34812612	Taiyo	Murata
152S00403	152S00322		ALL	rdar://problem/34319209	Chilisin	Murata
372S00016	372S00015		ALL	rdar://problem/34320842	Diodes	On Semi
376S1080	376S0820		ALL	rdar://problem/34320959	Diodes	On Semi
376S00074	376S0855		ALL	rdar://problem/34321106	Toshiba	Diodes
353S01320	353S01346		ALL	rdar://problem/33903814	NXP	On Semi
107S0240	107S0255		ALL	rdar://problem/33930580	TFT	Cyntec
152S00765	152S00239		ALL	Per Peter H	Chilisin	Cyntec
377S00123	377S00031		ALL	rdar://problem/35399063	Semtech	ON Semi
377S0077	377S0183		ALL	rdar://problem/35403837	ST	Infineon
377S0184	377S0155		ALL	rdar://problem/35404095	Infineon	ON Semi
740S00005	740S0190		ALL	rdar://problem/35404496	Littelfuse	Wayon
376S1137	376S00019		ALL	rdar://problem/33955940	Vishay	Diodes
155S0706	155S0302		ALL	rdar://problem/32364222	Taiyo	Murata
311S0596	311S0593		ALL	rdar://problem/35040623	TI	NXP/Nexperia
131S00134	131S00041		ALL	rdar://problem/36353852	Murata	Taiyo
353S00711	353S2073		ALL	rdar://problem/36563522	ON Semi	TI
353S00712	353S2216		ALL	rdar://problem/36563854	ON Semi	TI
371S0689	371S00197		ALL	rdar://problem/33930952	NXP	Diodes
132S00202	132S00175		ALL	rdar://problem/36674713	Murata/Taiyo	Kyocera/Samsung
138S00109	138S0914		ALL	rdar://problem/36484938	Kyocera	Murata
311S0372	311S0562		ALL	rdar://problem/35404697	NXP/Nexperia	TI
376S00282	376S1128		ALL	rdar://problem/33904000	Nexperia	Diodes
131S00142	132S0312		ALL	rdar://problem/36993892	Samsung	Murata
152S00735	152S01013		ALL	Email per Peter H	Chilisin	Cyntec
152S00731	152S01013		ALL	Email per Peter H	Cyntec	Cyntec
152S00348	152S01013		ALL	Email per Peter H	Vishay	Cyntec
152S00280	152S00356		ALL	Email per Peter H	Cyntec	Chilisin
152S00394	152S00260		ALL	rdar://problem/39510566	Vishay	Cyntec
131S00308	131S00037		ALL	Email per Peter H	Yageo	Murata
353S00525	353S4471		ALL	rdar://problem/39513670	Vishay	Vishay
353S00832	353S4471		ALL	rdar://problem/39513670	Fairchild	Vishay
311S00193	311S00192		ALL	rdar://problem/39512882	TI	NXP
103S0321	103S0276		ALL	Email per Peter H	Yageo	Cyntec
371S00193	371S00015		ALL	Email per CE	Rohm	Toshiba
138S0863	138S0853		ALL	rdar://problem/40634165	Taiyo	Murata
107S00053	107S00071		ALL	rdar://problem/40145084	Cyntec	Yageo
107S00005	107S00101		ALL	rdar://problem/40145309	Cyntec	Yageo
311S00004	311S0370		ALL	rdar://problem/40179470	ON Semi	NXP/Nexperia
376S00146	376S1061		ALL	rdar://problem/40315007	Rohm	Diodes
371S00085	371S00190		ALL	rdar://problem/40314867	ON Semi	Diodes
138S00111	138S00036		ALL	Per Peter H	Taiyo	Murata
377S00079	377S00077		ALL		Diodes	ST Micro
376S00309	376S00074		ALL	rdar://problem/40181869	Diodes	Toshiba
138S00022	138S0801		ALL	rdar://problem/40667960	Taiyo	Murata, Samsung
353S01024	353S2208		ALL	rdar://problem/40468973	On Semi	TI
376S00343	376S00161		ALL	rdar://problem/42347938	On Semi	Diodes
376S00344	376S00161		ALL	Per Eric Lee	Alpha Omega	Diodes

苹果最新图纸

PAGE TITLE
BOM Alternates

Apple Inc.

DRAWING NUMBER 051-04039 SIZE D
REVISION 2.0.0
BRANCH
PAGE 145 OF 145
SHEET 85 OF 85

NOTICE OF PROPRIETARY PROPERTY:
THE INFORMATION CONTAINED HEREIN IS THE PROPRIETARY PROPERTY OF APPLE INC.
THE POSESSOR AGREES TO THE FOLLOWING:
I TO MAINTAIN THIS DOCUMENT IN CONFIDENCE
II NOT TO REPRODUCE OR COPY IT
III NOT TO REVEAL OR PUBLISH IT IN WHOLE OR PART
IV ALL RIGHTS RESERVED